COUNTY OF SAN MATEO
PLANNING AND BUILDING DEPARTMENT

DATE: August 18, 2022

TO: Zoning Hearing Officer

FROM: Planning Staff

SUBJECT: Consideration of Use Permit Renewal, pursuant to Section 6512.6 of the Zoning Regulations, to allow the continued operation of an existing wireless telecommunication facility operated by AT&T Mobility. The project site is located within a portion of the CalTrans right-of-way between Lawler Ranch Road to the east and Highway I-280 to the west (near 10 Lawler Ranch Road), in the unincorporated Stanford Lands area of San Mateo County. The site is located within the Junipero Serra State Scenic Corridor.

County File Numbers: PLN 2010-00205 (AT&T)

PROPOSAL

The project applicant, Kathryn Leal of Epic Wireless, proposes on behalf of AT&T to renew an existing Use Permit (PLN 2010-00205) to allow the continued operation of a wireless telecommunication facility located within the CalTrans right-of-way and on the west side of Highway I-280, in the unincorporated Stanford Lands area of San Mateo County. The existing facility consists of a 22-foot-high monopole, nine (9) antennas, and associated equipment within a 25’ x 15’ 3” lease area (enclosed by a 7-foot chain link fence with green slats). Since the 2010 Use Permit approval, several building permits have been issued to allow minor modifications, which qualify for Federal preemption under the Middle-Class Tax Relief and Job Creation Act of 2012, including the replacement and installation of antennas and associated equipment. No additional physical changes are proposed under this renewal.

RECOMMENDATION

That the Zoning Hearing Officer approve the Use Permit Renewal, County File No. PLN 2010-00205 by making the required findings and adopting the conditions of approval listed in Attachment A.

BACKGROUND

Report Prepared By: Glen Jia, Project Planner; bjia@smcgov.org

Applicant: Kathryn Leal of Epic Wireless for AT&T Mobility

Owner: California Department of Transportation (CalTrans)

Public Notification: Ten (10) day advanced notification for the hearing was mailed to property owners within 300 feet of the project parcel and a notice for the hearing posted in a newspaper San Mateo Times.

Location: Within a CalTrans right-of-way, on the west side of Highway I-280, in the unincorporated Stanford Lands area of San Mateo County

APN: N/A; Adjacent to 073-250-050 (10 Lawler Ranch Road)

Parcel Size: N/A

Existing Zoning: R-E/S-11 (Residential Estates/Residential Density District 11)

General Plan Designation: Mixed, Institutional/Open Study/Future Study

Existing Land Use: Wireless Telecommunication Facility

Flood Zone: Zone X (Areas of Minimal Flood Hazard); Community Panel No. 06081C0311E; effective date October 16, 2012.

Environmental Evaluation: The project is categorically exempt pursuant to Section 15301, Class 1, of the California Environmental Quality Act (CEQA) Guidelines for the continued operation of existing public or private facilities involving no physical changes or expansion of use.

Setting: This site is approximately 0.25 miles north of the intersection of Lawler Ranch Road and Sand Hill Road, on the east side of Lawler Ranch Road. Lawler Ranch Road is a public road leading to existing telecommunication facilities for AT&T. The project site is located within a CalTrans right-of-way and approximately 125 feet west of Highway I-280, which is part of the Junipero Serra State Scenic Corridor. The Existing facility consists of nine (9) antennas on a 22-foot monopole and associated equipment occupying a 25’ x 15’ 3” lease area. The subject parcel is surrounded by developed and vacant lots owned primarily by Leland Stanford Jr. University.

Chronology:

Date	Action
November 10, 2010	Original Use Permit Granted
May 10, 2013	Building Permit No. BLD 2013-00565 issued for minor modifications, including the installation of equipment associated with the existing facility
June 9, 2016	Building Permit No. BLD 2016-00268 issued for minor modifications, including the replacement and installation of antennas and associated equipment
August 2, 2018	Building Permit No. BLD 2018-01184 issued for minor modifications, including the replacement and installation of antennas and associated equipment
September 21, 2021	Received application and payment for use permit renewal for planning application number PLN 2010-00205 (AT&T)
December 16, 2021	Requested information provided by Applicant
April 8, 2022	Building Permit No. BLD 2021-02312 issued for minor modifications, including the replacement and installation of antennas and associated equipment
May 4, 2022	Additional information provided by Applicant
May 5, 2022	Application deemed complete
August 18, 2022	Zoning Hearing Officer public hearing

DISCUSSION

A. KEY ISSUES

1. Conformance with the General Plan

The project continues to conform with the applicable General Plan policies for Visual Quality and Land Use as no additional physical changes to the existing facility are proposed. The site is located within Junipero Serra State Scenic Corridor. The project site is wooded, and the facility is not visible from the Junipero Serra Freeway (I-280). The existing facility maintains appropriate screening and colors. For these reasons, the existing facility does not result in any negative impact on views.

2. Conformance with Zoning Regulations

The project site is located within the R-E/S-11 (Residential Estates/Single-family Residential) zoning district. The existing wireless telecommunication facility is operating under PLN 2010-00205 Use Permit. No additional physical changes are proposed.

3. Conformance with Wireless Telecommunication Facilities Ordinance

Staff has determined that the project complies with the applicable standards of the Wireless Telecommunication Facilities (WTF) Ordinance, as discussed below:

a. *Development and Design Standards*

Section 6512.2.E – G seeks to minimize and mitigate visual impacts from public views by designing facilities to blend in with the surrounding environment, maintaining exterior equipment to blend with the surrounding environment and/or buildings and requiring facilities to be constructed of non-reflective materials.

The existing facility is screened by a 7-foot high chainlink fence with green slats and is constructed of non-reflective materials. No additional physical changes to the facility are proposed.

4. Conformance with Use Permit Findings

In order to approve the subject Use Permit Renewal, the Zoning Hearing Officer must make the following findings:

a. *That the establishment, maintenance, and/or conducting of the use will not, under the circumstances of the particular case, result in a significant adverse impact to coastal resources, or be detrimental to the public welfare or injurious to property or improvements in the neighborhood.*

The existing telecommunication facility is not located in the Coastal Zone and has been in operation since 2010. The facility will continue to be unmanned and requires regular maintenance visits to test the equipment. Thus, the continued operation of the existing facility does not generate significant traffic, noise, or intensify the use of the site. Additionally, the facility will continue to meet the federal standards for radio frequency (RF) emission, as further discussed in Attachment E. No additional physical changes to the facility are proposed.

b. *That the telecommunication facilities are necessary for the public health, safety, convenience, or welfare of the community.*

Staff has determined that the continued operation of the existing cellular facility at this location will allow for continued cellular communication coverage for private citizens and businesses. The existing wireless telecommunication facility has been in existence for over ten years. Community members, businesspersons, and residents have come to rely on the coverage provided by these sites to facilitate daily conversation and to provide assistance in emergency situations.

5. Conformance with Conditions of Last Use Permit Approvals

Staff has reviewed the previous Use Permit conditions of approval for AT&T (PLN 2010-00205), last approved November 10, 2010 and has determined AT&T Mobility is in compliance with all previous conditions, see Attachment E. No additional physical changes are proposed as part of the renewal. Previous conditions that remain relevant, along with new conditions, are included in Attachment A of this staff report.

B. ENVIRONMENTAL REVIEW

The project is categorically exempt pursuant to Section 15301, Class 1, of the CEQA Guidelines for the continued operation of existing public or private facilities involving no alterations or expansion of use as no additional physical changes are proposed.

C. REVIEWING AGENCIES

San Mateo County Building Inspection Section
San Mateo County Department of Public Works
Woodside Fire Protection District
Caltrans

ATTACHMENTS

A. Recommended Findings and Conditions of Approval
B. Location Map
C. Project Plans
D. Photos of Existing Wireless Telecommunication Facility
E. PLN 2010-00205 Conditions from the 2010 Use Permit Approval
F. Radio Frequency Emissions Compliance Report

GJI:cmc – GJIGG0237_WCU.DOCX

Attachment A

County of San Mateo
Planning and Building Department

RECOMMENDED FINDINGS AND CONDITIONS OF APPROVAL

Permit or Project File Number: PLN 2010-00205 Hearing Date: August 18, 2022

Prepared By: Glen Jia, Project Planner For Adoption By: Zoning Hearing Officer

RECOMMENDED FINDINGS

Regarding the Environmental Review, Find:

1. That the project is categorically exempt pursuant to Section 15301, Class 1, of the CEQA Guidelines for the continued operation of existing public or private facilities involving no additional physical changes and no expansion of use.

Regarding the Use Permit, Find:

2. That the establishment, maintenance and/or conducting of the use will not, under the circumstances of this particular case, result in a significant adverse impact to coastal resources, or be detrimental to the public welfare or injurious to the property or improvements in the said neighborhood because the facility is not located in the Coastal Zone, meets current Federal Communications Commission (FCC) standards and has been conditioned to maintain valid FCC and California Public Utilities Commission (CPUC) licenses. The telecommunication facility is located within a portion of the CalTrans right-of-way between Lawler Ranch Road to the east and Highway I-280 to the west (near 10 Lawler Ranch Road) in the unincorporated Stanford Lands area of San Mateo County. With regard to visual impacts, the monopole, antennas, and associated equipment blend with the surroundings. No additional physical changes to the facility are proposed. Furthermore, the radio frequency emissions compliance report confirms the telecommunication facility does not exceed the Federal Communications Commission (FCC) General Population limits, and thus does not cause any significant impacts on the environment.

3. That the wireless telecommunication facility is necessary for public health, safety, convenience or welfare since it provides cellular coverage in the area for both public and private users who have come to rely on the coverage provided by the facility for daily conversation and to provide assistance in emergency situations.

RECOMMENDED CONDITIONS OF APPROVAL

Current Planning Section

1. This approval applies only to the proposal, documents, and plans described in this report and materials approved by the Zoning Hearing Officer on August 18, 2022. The Community Development Director may approve minor revisions or modifications to the project if they are consistent with the intent of and in substantial conformance with this approval.

2. This permit shall be valid until August 18, 2032, ten (10) years from the date of approval. Renewal of this permit shall be applied for six (6) months prior to expiration to the Planning and Building Department and shall be accompanied by the renewal application and fees applicable at that time.

3. This use permit renewal shall be for the continued operation of the existing telecommunication facility only. Any substantial change or change in intensity of use shall require an amendment to the use permit, which requires an application for amendment, payment of applicable fees, and consideration at a public hearing.

4. The applicant shall maintain all necessary licenses and registrations from the Federal Communications Commission (FCC) and any other applicable regulatory bodies for the operation of the subject facility at this site. If any required license is ever revoked, the applicant shall inform the Planning Department of the revocation within ten (10) days of receiving notice of such revocation.

5. This facility and all equipment associated with it shall be removed in its entirety by the applicant within ninety (90) days if the FCC license and registration are revoked or if the facility is abandoned or no longer needed. The owner and/or operator of the facility shall notify the Planning Department upon FCC revocation or applicant abandonment of the facility.

6. The property owner shall not enter into a contract with the lessee which reserves for one company exclusive use of structures on this site for telecommunications facilities

7. If technically practical and without creating any interruption in commercial service caused by electronic magnetic interference (EMI), floor space, tower space and/or rack space for equipment in a wireless telecommunication facility shall be made available to the County for public safety communication use.

8. The applicant shall be responsible for maintaining the existing antennas, monopole, associated equipment in the originally approved and painted color. Any proposal to change the color shall be reviewed and approved by the Planning Department prior to painting.

9. Maintenance for the antennas shall only be performed between 9:00 am and 5:00 pm.

Department of Public Works

10. Encroachment permit is required for any construction-related activities within the right-of-way. Provide duration, hours, and traffic control plan at the time of encroachment permit application.

Caltrans

11. An encroachment permit is required for any construction-related activities within the Caltrans right-of-way.

GJI:cmc – GJIGG0237_WCU.DOCX

County of San Mateo - Planning and Building Department

ATTACHMENT B

San Mateo County

County San Mateo, CA

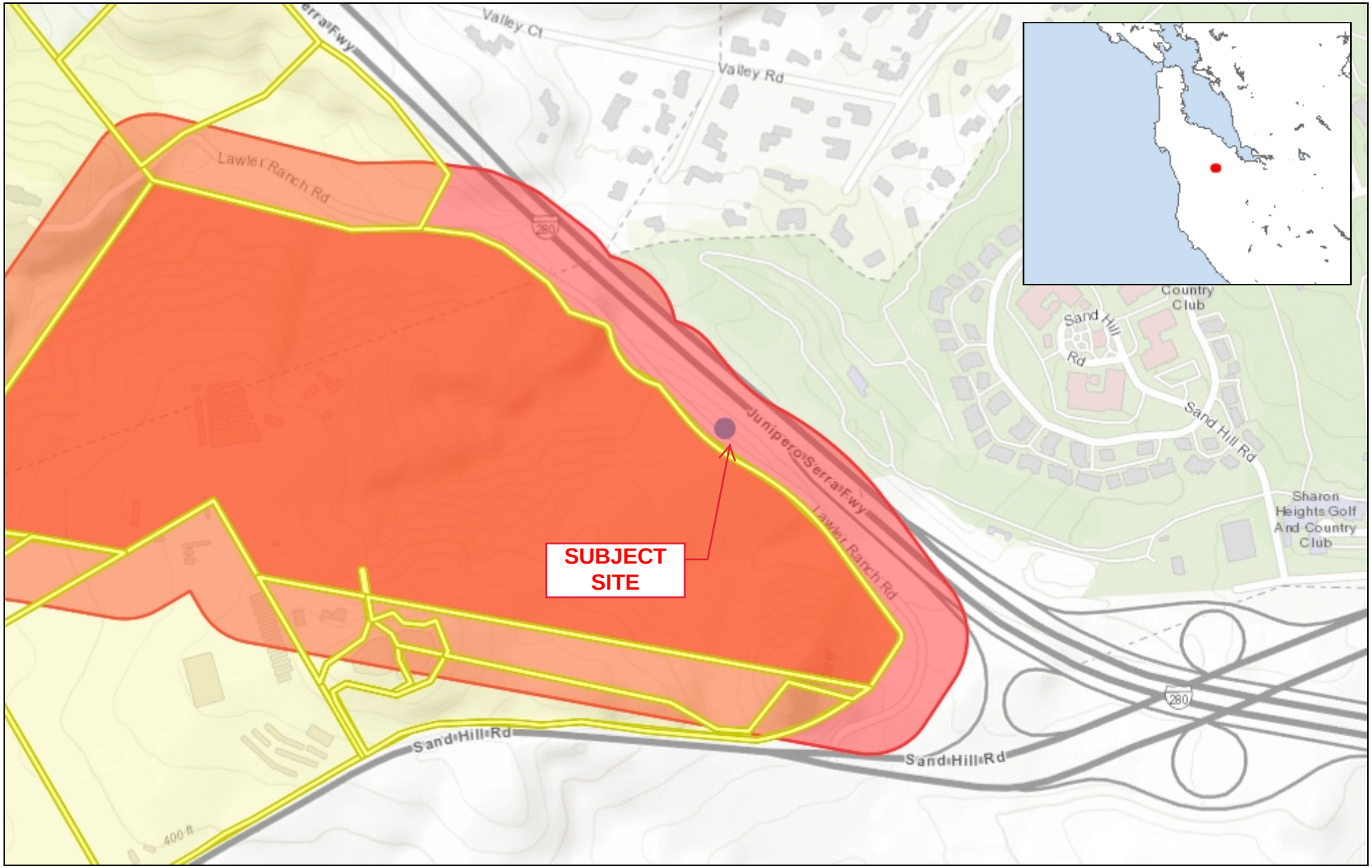

0.28 0 0.14 0.28 Miles

WGS_1984_Web_Mercator_Auxiliary_Sphere

1: 9,028

This map is a user generated static output from an Internet mapping site and is for reference only. Data layers that appear on this map may or may not be accurate, current, or otherwise reliable.

THIS MAP IS NOT TO BE USED FOR NAVIGATION

County of San Mateo - Planning and Building Department

ATTACHMENT C

CODE COMPLIANCE

ALL WORK AND MATERIALS SHALL BE PERFORMED AND INSTALLED IN ACCORDANCE WITH THE CURRENT EDITIONS OF THE FOLLOWING CODES AS ADOPTED BY THE LOCAL GOVERNING AUTHORITIES. NOTHING IN THESE PLANS IS TO BE CONSTRUED TO PERMIT WORK NOT CONFORMING TO THESE CODES.

1. CALIFORNIA BUILDING STANDARDS CODE: 2019 TRIENNIAL EDITION OF TITLE 24, WITH AN EFFECTIVE DATE OF JANUARY 1, 2020.
   PART 1 - CALIFORNIA ADMINISTRATIVE CODE
   PART 2 - CALIFORNIA BUILDING CODE, BASED ON THE 2018 INTERNATIONAL BUILDING CODE
   PART 2.5 - CALIFORNIA RESIDENTIAL CODE, BASED ON THE 2018 INTERNATIONAL RESIDENTIAL CODE
   PART 3 - CALIFORNIA ELECTRICAL CODE, BASED ON THE 2017 NATIONAL ELECTRICAL CODE
   PART 4 - CALIFORNIA MECHANICAL CODE, BASED ON THE 2018 UNIFORM MECHANICAL CODE
   PART 5 - CALIFORNIA PLUMBING CODE, BASED ON THE 2018 UNIFORM PLUMBING CODE
   PART 6 - CALIFORNIA ENERGY CODE
   PART 7 - VACANT
   PART 8 - CALIFORNIA HISTORICAL BUILDING CODE
   PART 9 - CALIFORNIA FIRE CODE, BASED ON THE 2018 INTERNATIONAL FIRE CODE
   PART 10 - CALIFORNIA EXISTING BUILDING CODE, BASED ON THE 2018 INTERNATIONAL EXISTING BUILDING CODE
   PART 11 - CALIFORNIA GREEN BUILDING STANDARDS CODE (ALSO KNOWN AS CALGREEN)
   PART 12 - CALIFORNIA REFERENCED STANDARDS CODE
2. ANSI/TIA-222 (REV H)
3. 2018 NFPA 101, LIFE SAFETY CODE
4. 2019 NFPA 72, NATIONAL FIRE ALARM AND SIGNALING CODE
5. 2019 NFPA 13, STANDARD FOR THE INSTALLATION OF SPRINKLER SYSTEMS

PROJECT TEAM

APPLICANT / LESSEE:

AT&T MOBILITY SERVICES, LLC
5001 EXECUTIVE PKWY,
SAN RAMON, CA 94583
CONTACT: ROSALIND T. DUNCAN
South Bay Project Manager
EMAIL: rr6459@att.com
PH: (925) 968-8179

PROJECT MANAGER, LEASING & ZONING:

J5 INFRASTRUCTURE PARTNERS
23 MAUCHLY, SUITE 110
IRVINE, CA 92618
CONTACT: CHARLES OTIS
EMAIL: cotis@j5ip.com
PH: (805) 680-5453

CONSTRUCTION MANAGER:

AT&T MOBILITY SERVICES, LLC
5001 EXECUTIVE PKWY,
SAN RAMON, CA 94583
CONTACT: PHUNG NGUYEN
Sr. Specialist-Tech
Vendor Management
Technology Operations
EMAIL: pn644t@att.com
PH: (925) 277-6480
CELL: (408) 391-0786

A&E MANAGER:

J5 INFRASTRUCTURE PARTNERS
23 MAUCHLY, SUITE 110
IRVINE, CA 92618
contact: JASON OFFINEER
email: joffineer@j5ip.com
ph: (619) 370-4859

RF ENGINEER:

AT&T MOBILITY SERVICES, LLC
5001 EXECUTIVE PKWY,
SAN RAMON, CA 94583
CONTACT: TARUN SETHI
RAN ENGINEER
EMAIL: ts458v@att.com
PH: (925) 457-5088

SITE INFORMATION

PROPERTY OWNER:
CALIFORNIA DEPARTMENT OF TRANSPORTATION
1120 N STREET
SACRAMENTO, CA 95814

JURISDICTION:	COUNTY OF SAN MATEO
A.P.N.:	ROW
CURRENT ZONING:	U-2
EXISTING USE:	MULTIUSE
PROPOSED USE:	MULTIUSE, COMMUNICATIONS FACILITY
LATITUDE (NAD 83):	37° 25' 20.03988" N 37.4222333°
LONGITUDE (NAD 83):	122° 13' 36.98004" W -122.2269389°

ACCESSIBILITY REQUIREMENTS: FACILITY IS UNMANNED AND NOT FOR HUMAN HABITATION. ACCESSIBILITY IS NOT REQUIRED PER CBC2019, SECTION 11B-203.4 (LIMITED ACCESS SPACE)

POWER AGENCY:
PG&E
PH: (800) 743-5000

TELEPHONE AGENCY:
AT&T

RFDS VERSION: 2.00
DATE UPDATED: 04/26/21

AT&T

SITE NUMBER: CCL05707
SITE NAME: SHARON HEIGHTS
SITE TYPE: MONOPOLE / OUTDOOR EQUIPMENT
ADDRESS: 10 LAWLER RANCH ROAD MENLO PARK, CA 94025

USID: 113035
FA#: 10134379
5G NR 1SR CBAND
PTN#: 3701A0YHAN
PACE#: MRSFR078951
4TXRX ANTENNA RETROFIT
PTN#: 3701A0YHX9
PACE#: MRSFR078734

VICINITY MAP

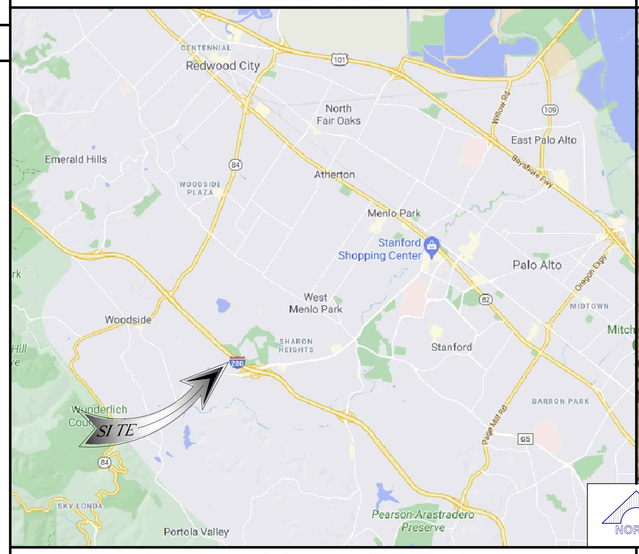

LOCAL MAP

APPROVALS

THE FOLLOWING PARTIES HEREBY APPROVE AND ACCEPT THESE DOCUMENTS & AUTHORIZE THE SUBCONTRACTOR TO PROCEED WITH CONSTRUCTION DESCRIBED HEREIN. ALL DOCUMENTS ARE SUBJECT TO REVIEW BY LOCAL BUILDING DEPARTMENT & MAY IMPOSE CHANGES AND MODIFICATIONS.

DISCIPLINE:	SIGNATURE	DATE
RF ENGINEER:		
AT&T PM:		
CIVIL:		
A&E:		
SAQ PM:		
PROPERTY OWNER:		

PROJECT DESCRIPTION

MODIFICATION TO AN UNMANNED TELECOMMUNICATIONS FACILITY, CONSISTING OF THE FOLLOWING:

- REMOVE (9) ANTENNAS, TYP. (3) PER SECTOR
- INSTALL (9) NEW ANTENNAS, TYP. (3) PER SECTOR
- REMOVE (3) EXISTING RRUS 11 B12 FROM EQUIPMENT AREA
- REMOVE (3) EXISTING RRUS4478 B5 AT ANTENNAS TYP. (1) PER SECTOR
- INSTALL (3) RRUS 4449 B5/B12 AT ANTENNAS, TYP. (1) PER SECTOR
- INSTALL (3) CBC78T-DS-43 DIPLEXERS AT ANTENNAS, TYP. (1) PER SECTOR
- INSTALL (5) NEW RECTIFIERS WITHIN EXISTING RBA72 DCPP
- REMOVE (1) EXISTING RBS 2106 CABINET
- REMOVE (12) 7/8"Ø COAX CABLES
- INSTALL (1) NEW BATTERY CABINET WITH (2) STRINGS OF 185AH BATTERIES
- INSTALL (1) NEW DC6 SURGE ARRESTOR UP TOP
- INSTALL (2) #6 AWG POWER CABLES AND (1) 1/4" FIBER CABLES TO NEW SURGE ARRESTOR AT TOP
- INSTALL (1) #6 AWG POWER CABLE TO FULLY LOAD EXISTING DC6 AT TOP
- INSTALL (3) NEW ANCHOR RODS AT BASE OF EXISTING MONOPOLE

Plan set to serve as the as-built drawings for the renewal of the land use permit previously approved under PLN2012-00111

No proposed changes to the existing facility.

GENERAL CONTRACTOR NOTES

DO NOT SCALE DRAWINGS

THESE PLANS ARE FORMATTED TO BE FULL SIZE AT 24" X 36". CONTRACTORS SHALL VERIFY ALL PLANS AND EXISTING DIMENSIONS AND CONDITIONS ON THE JOB SITE AND SHALL IMMEDIATELY NOTIFY THE ARCHITECT/ENGINEER IN WRITING OF ANY DISCREPANCIES BEFORE PROCEEDING WITH THE WORK OR MATERIAL ORDERS OR BE RESPONSIBLE FOR THE SAME.

GENERAL NOTES

THE FACILITY IS UNMANNED AND NOT FOR HUMAN HABITATION. A TECHNICIAN WILL VISIT THE SITE AS REQUIRED FOR ROUTINE MAINTENANCE. THE PROJECT WILL NOT RESULT IN ANY SIGNIFICANT DISTURBANCE OR EFFECT ON DRAINAGE; NO SANITARY SEWER SERVICE, POTABLE WATER, OR TRASH DISPOSAL IS REQUIRED AND NO COMMERCIAL SIGNAGE IS PROPOSED.

STATEMENTS

STRUCTURAL ANALYSIS IS NOT WITHIN THE SCOPE OF WORK CONTAINED IN THIS DRAWINGS SET. FOR ANALYSIS OF EXISTING AND/OR PROPOSED COMPONENTS, REFER TO STRUCTURAL ANALYSIS PROVIDED UNDER SEPARATE COVER.

ANTENNA MOUNT ANALYSIS IS NOT WITHIN THE SCOPE OF WORK CONTAINED IN THIS DRAWING SET. FOR ANALYSIS OF MOUNT TO SUPPORT EXISTING AND/OR PROPOSED COMPONENTS, REFER TO ANTENNA MOUNT STRUCTURAL ANALYSIS PROVIDED UNDER SEPARATE COVER.

DRIVING DIRECTIONS

DIRECTIONS FROM AT&T OFFICE: 5001 EXECUTIVE PKWY, SAN RAMON CA 94583

1. TURN RIGHT ONTO EXECUTIVE PKWY
2. TURN RIGHT ONTO CAMINO RAMON
3. USE THE RIGHT TWO LANES TO TURN RIGHT ONTO BOLLINGER CANYON RD
4. USE THE RIGHT LANE TO MERGE ONTO I-680 S VIA THE RAMP TO SAN JOSE
5. MERGE ONTO I-680 S
6. TAKE EXIT 12 TO MERGE ONTO CA-262 S/MISSION BLVD
7. MERGE ONTO CA-262 S/MISSION BLVD
8. USE THE LEFT TWO LANES TO MERGE ONTO I-880 S TOWARD SAN JOSE
9. USE THE RIGHT TWO LANES TO STAY ON I-880 S
10. USE THE RIGHT TWO LANES TO TAKE EXIT 8C FOR CA-237 W TOWARD MOUNTAIN VIEW
11. CONTINUE ONTO CA-237 W
12. TAKE EXIT 1B TO MERGE ONTO CA-85 S TOWARD LOS GATOS/CA-82/SANTA CRUZ
13. USE THE RIGHT LANE TO TAKE THE I-280 EXIT TOWARD SAN JOSE/SAN FRANCISCO
14. KEEP RIGHT AT THE FORK AND MERGE ONTO I-280 N
15. TAKE EXIT 24 FOR SAND HILL ROAD
16. KEEP RIGHT AT THE FORK TO CONTINUE ON EXIT 24, FOLLOW SIGNS FOR SAND HILL ROAD AND MERGE ONTO SAND HILL ROAD
17. MERGE ONTO SAND HILL ROAD
18. KEEP LEFT TO STAY ON SAND HILL ROAD
19. TURN LEFT ONTO LAWLER RANCH ROAD

DIGALERT
800-227-2600
Call 2 Full Working Days In Advance

SHEET INDEX

PREPARED FOR

AT&T

5001 EXECUTIVE PKWY,
SAN RAMON CA 94583

Vendor:

J5 INFRASTRUCTURE PARTNERS

23 MAUCHLY, SUITE 110
IRVINE, CA 92618

P-055023

AT&T Site ID:

CCL05707

REV	DATE	DESCRIPTION	INT.
1	08/27/21	ADD GPD + EME	MM3
0	06/08/21	100% CD	ES/MM
A	05/05/21	90% CD	BH/MM

Licensor:

REGISTERED PROFESSIONAL ENGINEER
SEUNG KUN OH
C 84365
CIVIL
STATE OF CALIFORNIA

SIGNED: 08/27/2021
EXPIRES: 09/30/2023

It is a violation of law for any persons, unless they are acting under the direction of a licensed professional engineer, to alter this document

Issued For:

CCL05707

SHARON HEIGHTS

10 LAWLER RANCH ROAD
MENLO PARK, CA 94025

Sheet Title:

TITLE SHEET

Sheet Number:

T-1

GENERAL CONSTRUCTION NOTES:

1. PLANS ARE INTENDED TO BE DIAGRAMMATIC OUTLINE ONLY, UNLESS NOTED OTHERWISE. THE WORK SHALL INCLUDE FURNISHING MATERIALS, EQUIPMENT, APPURTENANCES AND LABOR NECESSARY TO COMPLETE ALL INSTALLATIONS AS INDICATED ON THE DRAWINGS.
2. THE CONTRACTOR SHALL OBTAIN, IN WRITING, AUTHORIZATION TO PROCEED BEFORE STARTING WORK ON ANY ITEM NOT CLEARLY DEFINED OR IDENTIFIED BY THE CONTRACT DOCUMENTS.
3. CONTRACTOR SHALL CONTACT USA (UNDERGROUND SERVICE ALERT) AT (800) 227-2600, FOR UTILITY LOCATIONS, 48 HOURS BEFORE PROCEEDING WITH ANY EXCAVATION, SITE WORK OR CONSTRUCTION.
4. THE CONTRACTOR SHALL INSTALL ALL EQUIPMENT AND MATERIALS IN ACCORDANCE WITH MANUFACTURER'S RECOMMENDATIONS UNLESS SPECIFICALLY INDICATED OTHERWISE, OR WHERE LOCAL CODES OR REGULATIONS TAKE PRECEDENCE.
5. ALL CONSTRUCTION SHALL BE IN ACCORDANCE WITH THE CBC / UBC'S REQUIREMENTS REGARDING EARTHQUAKE RESISTANCE, FOR, BUT NOT LIMITED TO, PIPING, LIGHT FIXTURES, CEILING GRID, INTERIOR PARTITIONS, AND MECHANICAL EQUIPMENT. ALL WORK MUST COMPLY WITH LOCAL EARTHQUAKE CODES AND REGULATIONS.
6. REPRESENTATIONS OF TRUE NORTH, OTHER THAN THOSE FOUND ON THE PLOT OF SURVEY DRAWINGS, SHALL NOT BE USED TO IDENTIFY OR ESTABLISH BEARING OF TRUE NORTH AT THE SITE. THE CONTRACTOR SHALL RELY SOLELY ON THE PLOT OF SURVEY DRAWING AND ANY SURVEYOR'S MARKINGS AT THE SITE FOR THE ESTABLISHMENT OF TRUE NORTH, AND SHALL NOTIFY THE ARCHITECT / ENGINEER PRIOR TO PROCEEDING WITH THE WORK IF ANY DISCREPANCY IS FOUND BETWEEN THE VARIOUS ELEMENTS OF THE WORKING DRAWINGS AND THE TRUE NORTH ORIENTATION AS DEPICTED ON THE CIVIL SURVEY. THE CONTRACTOR SHALL ASSUME SOLE LIABILITY FOR ANY FAILURE TO NOTIFY THE ARCHITECT / ENGINEER.
7. THE BUILDING DEPARTMENT ISSUING THE PERMITS SHALL BE NOTIFIED AT LEAST TWO WORKING DAYS PRIOR TO THE COMMENCEMENT OF WORK, OR AS OTHERWISE STIPULATED BY THE CODE ENFORCEMENT OFFICIAL HAVING JURISDICTION.
8. DO NOT EXCAVATE OR DISTURB BEYOND THE PROPERTY LINES OR LEASE LINES, UNLESS OTHERWISE NOTED.
9. ALL EXISTING UTILITIES, FACILITIES, CONDITIONS, AND THEIR DIMENSIONS SHOWN ON THE PLAN HAVE BEEN PLOTTED FROM AVAILABLE RECORDS. THE ARCHITECT / ENGINEER AND THE OWNER ASSUME NO RESPONSIBILITY WHATSOEVER AS TO THE SUFFICIENCY OR THE ACCURACY OF THE INFORMATION SHOWN ON THE PLANS, OR THE MANNER OF THEIR REMOVAL OR ADJUSTMENT. CONTRACTORS SHALL BE RESPONSIBLE FOR DETERMINING EXACT LOCATION OF ALL EXISTING UTILITIES AND FACILITIES PRIOR TO START OF CONSTRUCTION. CONTRACTORS SHALL ALSO OBTAIN FROM EACH UTILITY COMPANY DETAILED INFORMATION RELATIVE TO WORKING SCHEDULES AND METHODS OF REMOVING OR ADJUSTING EXISTING UTILITIES.
10. CONTRACTOR SHALL VERIFY ALL EXISTING UTILITIES, BOTH HORIZONTAL AND VERTICALLY, PRIOR TO THE START OF CONSTRUCTION. ANY DISCREPANCIES OR DOUBTS AS TO THE INTERPRETATION OF PLANS SHOULD BE IMMEDIATELY REPORTED TO THE ARCHITECT / ENGINEER FOR RESOLUTION AND INSTRUCTION, AND NO FURTHER WORK SHALL BE PERFORMED UNTIL THE DISCREPANCY IS CHECKED AND CORRECTED BY THE ARCHITECT / ENGINEER. FAILURE TO SECURE SUCH INSTRUCTION MEANS CONTRACTOR WILL HAVE WORKED AT HIS/HER OWN RISK AND EXPENSE.
11. ALL NEW AND EXISTING UTILITY STRUCTURES ON SITE AND IN AREAS TO BE DISTURBED BY CONSTRUCTION SHALL BE ADJUSTED TO FINISH ELEVATIONS PRIOR TO FINAL INSPECTION OF WORK.
12. ANY DRAIN AND/OR FIELD TILE ENCOUNTERED / DISTURBED DURING CONSTRUCTION SHALL BE RETURNED TO IT'S ORIGINAL CONDITION PRIOR TO COMPLETION OF WORK. SIZE, LOCATION AND TYPE OF ANY UNDERGROUND UTILITIES OR IMPROVEMENTS SHALL BE ACCURATELY NOTED AND PLACED ON "AS-BUILT" DRAWINGS BY GENERAL CONTRACTOR, AND ISSUED TO THE ARCHITECT / ENGINEER AT COMPLETION OF PROJECT.
13. ALL TEMPORARY EXCAVATIONS FOR THE INSTALLATION OF FOUNDATIONS, UTILITIES, ETC., SHALL BE PROPERLY LAID BACK OR BRACED IN ACCORDANCE WITH CORRECT OCCUPATIONAL SAFETY AND HEALTH ADMINISTRATION (OSHA) REQUIREMENTS.
14. INCLUDE MISC. ITEMS PER AT&T SPECIFICATIONS

APPLICABLE CODES, REGULATIONS AND STANDARDS:

1. SUBCONTRACTOR'S WORK SHALL COMPLY WITH ALL APPLICABLE NATIONAL, STATE, AND LOCAL CODES AS ADOPTED BY THE LOCAL AUTHORITY HAVING JURISDICTION (AHJ) FOR THE LOCATION.
2. THE EDITION OF THE AHJ ADOPTED CODES AND STANDARDS IN EFFECT ON THE DATE OF CONTRACT AWARD SHALL GOVERN THE DESIGN.
3. SUBCONTRACTOR'S WORK SHALL COMPLY WITH THE LATEST EDITION OF THE FOLLOWING STANDARDS:
   - 3.1. AMERICAN CONCRETE INSTITUTE (ACI) 318, BUILDING CODE REQUIREMENTS FOR STRUCTURAL CONCRETE
   - 3.2. AMERICAN INSTITUTE OF STEEL CONSTRUCTION (AISC), MANUAL OF STEEL CONSTRUCTION, ASD, FIFTEENTH EDITION
   - 3.3. TELECOMMUNICATIONS INDUSTRY ASSOCIATION (TIA) 222-H, STRUCTURAL STANDARD FOR STRUCTURAL ANTENNA TOWER AND ANTENNA SUPPORTING STRUCTURES
   - 3.4. INSTITUTE FOR ELECTRICAL AND ELECTRONICS ENGINEERS (IEEE) 81, GUIDE FOR MEASURING EARTH RESISTIVITY, GROUND IMPEDANCE, AND EARTH SURFACE POTENTIALS OF A GROUND SYSTEM IEEE 1100 (1999) RECOMMENDED PRACTICE FOR POWERING AND GROUNDING OF ELECTRICAL EQUIPMENT.
   - 3.5. IEEE C62.41, RECOMMENDED PRACTICES ON SURGE VOLTAGES IN LOW VOLTAGE AC POWER CIRCUITS (FOR LOCATION CATEGORY "C3" AND "HIGH SYSTEM EXPOSURE")
   - 3.6. TIA 607 COMMERCIAL BUILDING GROUNDING AND BONDING REQUIREMENTS FOR TELECOMMUNICATIONS TELCORDIA GR-63 NETWORK
   - 3.7. EQUIPMENT-BUILDING SYSTEM (NEBS): PHYSICAL PROTECTION
   - 3.8. TELCORDIA GR-347 CENTRAL OFFICE POWER WIRING
   - 3.9. TELCORDIA GR-1275 GENERAL INSTALLATION REQUIREMENTS
   - 3.10. TELCORDIA GR-1503 COAXIAL CABLE CONNECTIONS
   - 3.11. ANY AND ALL OTHER LOCAL & STATE LAWS AND REGULATIONS
   - 3.12. FOR ANY CONFLICTS BETWEEN SECTIONS OF LISTED CODES AND STANDARDS REGARDING MATERIAL, METHODS OF CONSTRUCTION, OR OTHER REQUIREMENTS, THE MOST RESTRICTIVE SHALL GOVERN. WHERE THERE IS CONFLICT BETWEEN A GENERAL REQUIREMENT AND A SPECIFIC REQUIREMENT, THE SPECIFIC REQUIREMENT SHALL GOVERN.

ABBREVIATIONS:

A.B.	ANCHOR BOLT	FDN.	FOUNDATION	RGS.	RIGID GALVANIZED STEEL
ABV.	ABOVE	F.O.C.	FACE OF CONCRETE	SCH.	SCHEDULE
ACCA	ANTENNA CABLE COVER ASSEMBLY	F.O.M.	FACE OF MASONRY	SHT.	SHEET
ADD'L	ADDITIONAL	F.O.S.	FACE OF STUD	SIM.	SIMILAR
A.F.F.	ABOVE FINISHED FLOOR	F.O.W.	FACE OF WALL	SPEC.	SPECIFICATIONS
A.F.G.	ABOVE FINISHED GRADE	F.S.	FINISH SURFACE	SQ.	SQUARE
ALUM.	ALUMINUM	FT.(')	FOOT (FEET)	S.S.	STAINLESS STEEL
ALT.	ALTERNATE	FTG.	FOOTING	STD.	STANDARD
ANT.	ANTENNA	G.	GROWTH (CABINET)	STL.	STEEL
APPRX.	APPROXIMATE(LY)	GA.	GAUGE	STRUC.	STRUCTURAL
ARCH.	ARCHITECT(URAL)	GI.	GALVANIZE(D)	TEMP.	TEMPORARY
AWG.	AMERICAN WIRE GAUGE	G.F.I.	GROUND FAULT CIRCUIT	THK.	THICK(NESS)
BLDG.	BUILDING	INTERRUPTER		T.N.	TOE NAIL
BLK.	BLOCK	GLB. (GLU-LAM)	GLUE LAMINATED BEAM	T.O.A.	TOP OF ANTENNA
BLKG.	BLOCKING	GPS	GLOBAL POSITIONING SYSTEM	T.O.C.	TOP OF CURB
BM.	BEAM	GRND.	GROUND	T.O.F.	TOP OF FOUNDATION
B.N.	BOUNDARY NAILING	HDR.	HEADER	T.O.P.	TOP OF PLATE (PARAPET)
BTCW.	BARE TINNED COPPER WIRE	HGR.	HANGER	T.O.S.	TOP OF STEEL
B.O.F.	BOTTOM OF FOOTING	HT.	HEIGHT	T.O.W.	TOP OF WALL
B/U	BACK-UP CABINET	ICGB.	ISOLATED COPPER GROUND BUS	TYP.	TYPICAL
CAB.	CABINET	IN. (")	INCH(ES)	U.G.	UNDER GROUND
CANT.	CANTILEVER(ED)	INT.	INTERIOR	U.L.	UNDERWRITERS LABORATORY
C.I.P.	CAST IN PLACE	LB.(#)	POUND(S)	U.N.O.	UNLESS NOTED OTHERWISE
CLG.	CEILING	L.B.	LAG BOLTS	V.I.F.	VERIFY IN FIELD
CLR.	CLEAR	L.F.	LINEAR FEET (FOOT)	W	WIDE (WIDTH)
COL.	COLUMN	L.	LONG(ITUDINAL)	w/	WITH
CONC.	CONCRETE	MAS.	MASONRY	WD.	WOOD
CONN.	CONNECTION(OR)	MAX.	MAXIMUM	W.P.	WEATHERPROOF
CONST.	CONSTRUCTION	M.B.	MACHINE BOLT	WT.	WEIGHT
CONT.	CONTINUOUS	MECH.	MECHANICAL	℄	CENTERLINE
d	PENNY (NAILS)	MFR.	MANUFACTURER	PL	PLATE, PROPERTY LINE
DBL.	DOUBLE	MIN.	MINIMUM		
DEPT.	DEPARTMENT	MISC.	MISCELLANEOUS		
D.F.	DOUGLAS FIR	MTL.	METAL		
DIA.	DIAMETER	(N)	NEW		
DIAG.	DIAGONAL	NO.(#)	NUMBER		
DIM.	DIMENSION	N.T.S.	NOT TO SCALE		
DWG.	DRAWING(S)	O.C.	ON CENTER		
DWL.	DOWEL(S)	OPNG.	OPENING		
EA.	EACH	P	PROPOSED		
EL.	ELEVATION	P/C	PRECAST CONCRETE		
ELEC.	ELECTRICAL	PCS	PERSONAL COMMUNICATION SERVICES		
ELEV.	ELEVATOR				
EMT.	ELECTRICAL METALLIC TUBING	PLY.	PLYWOOD		
E.N.	EDGE NAIL	PPC	POWER PROTECTION CABINET		
ENG.	ENGINEER	PRC	PRIMARY RADIO CABINET		
EQ.	EQUAL	P.S.F.	POUNDS PER SQUARE FOOT		
EXP.	EXPANSION	P.S.I.	POUNDS PER SQUARE INCH		
EXST.(E)	EXISTING	P.T.	PRESSURE TREATED		
EXT.	EXTERIOR	PWR.	POWER (CABINET)		
FAB.	FABRICATION(OR)	QTY.	QUANTITY		
F.F.	FINISH FLOOR	RAD.(R)	RADIUS		
F.G.	FINISH GRADE	REF.	REFERENCE		
FIN.	FINISH(ED)	REINF.	REINFORCEMENT(ING)		
FLR.	FLOOR	REQ'D/	REQUIRED		

SYMBOLS LEGEND:

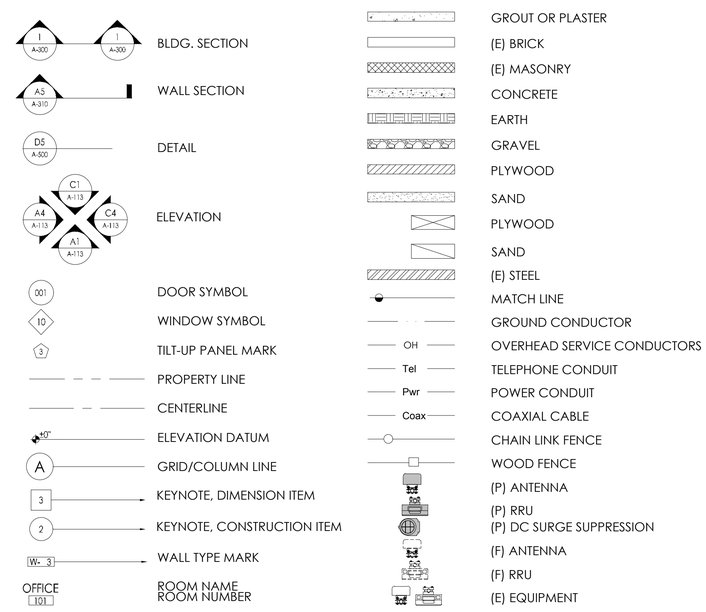

PREPARED FOR

AT&T

5001 EXECUTIVE PKWY,
SAN RAMON CA 94583

Vendor:

INFRASTRUCTURE PARTNERS

23 MAUCHLY, SUITE 110
IRVINE, CA 92618

P-055023

AT&T Site ID:

CCL05707

REV	DATE	DESCRIPTION	INT.
1	08/27/21	ADD GPD + EME	MM3
0	06/08/21	100% CD	ES/MM
A	05/05/21	90% CD	BH/MM

Licensor:

REGISTERED PROFESSIONAL ENGINEER SEUNG KUN OH C 84365 CIVIL STATE OF CALIFORNIA

SIGNED: 08/27/2021
EXPIRES: 09/30/2023

It is a violation of law for any persons, unless they are acting under the direction of a licensed professional engineer, to alter this document

Issued For:

CCL05707

SHARON HEIGHTS

10 LAWLER RANCH ROAD
MENLO PARK, CA 94025

Sheet Title:

GENERAL NOTES

Sheet Number:

GN-1

THIS IS NOT A SITE SURVEY

ALL PROPERTY BOUNDARIES, ORIENTATION OF TRUE NORTH AND STREET HALF-WIDTHS HAVE BEEN OBTAINED FROM A TAX PARCEL MAP AND EXISTING DRAWINGS AND ARE APPROXIMATE.

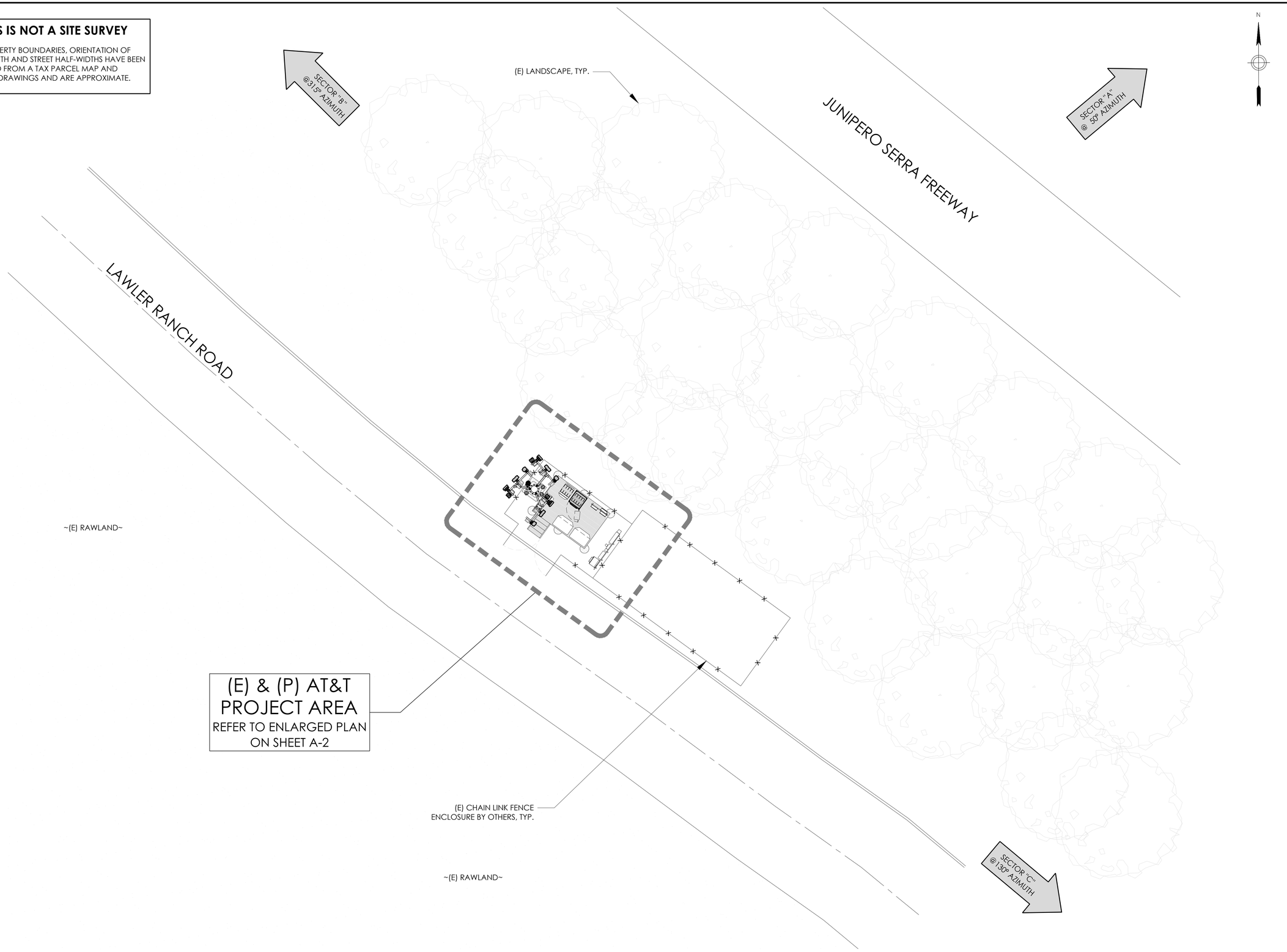

1 OVERALL SITE PLAN

24"x36" SCALE: 1" = 10'-0"
11"x17" SCALE: 1" = 20'-0"

10' 5' 0' 10'

PREPARED FOR

AT&T

5001 EXECUTIVE PKWY,
SAN RAMON CA 94583

Vendor:

J5 INFRASTRUCTURE PARTNERS

23 MAUCHLY, SUITE 110
IRVINE, CA 92618

P-055023

AT&T Site ID:

CCL05707

REV	DATE	DESCRIPTION	INT.
1	08/27/21	ADD GPD + EME	MM3
0	06/08/21	100% CD	ES/MM
A	05/05/21	90% CD	BH/MM

Licensor:

REGISTERED PROFESSIONAL ENGINEER
SEUNG KUN OH
C 84365
CIVIL
STATE OF CALIFORNIA

SIGNED: 08/27/2021
EXPIRES: 09/30/2023

It is a violation of law for any persons, unless they are acting under the direction of a licensed professional engineer, to alter this document

Issued For:

CCL05707

SHARON HEIGHTS

10 LAWLER RANCH ROAD
MENLO PARK, CA 94025

Sheet Title:

OVERALL SITE PLAN

Sheet Number:

A-1

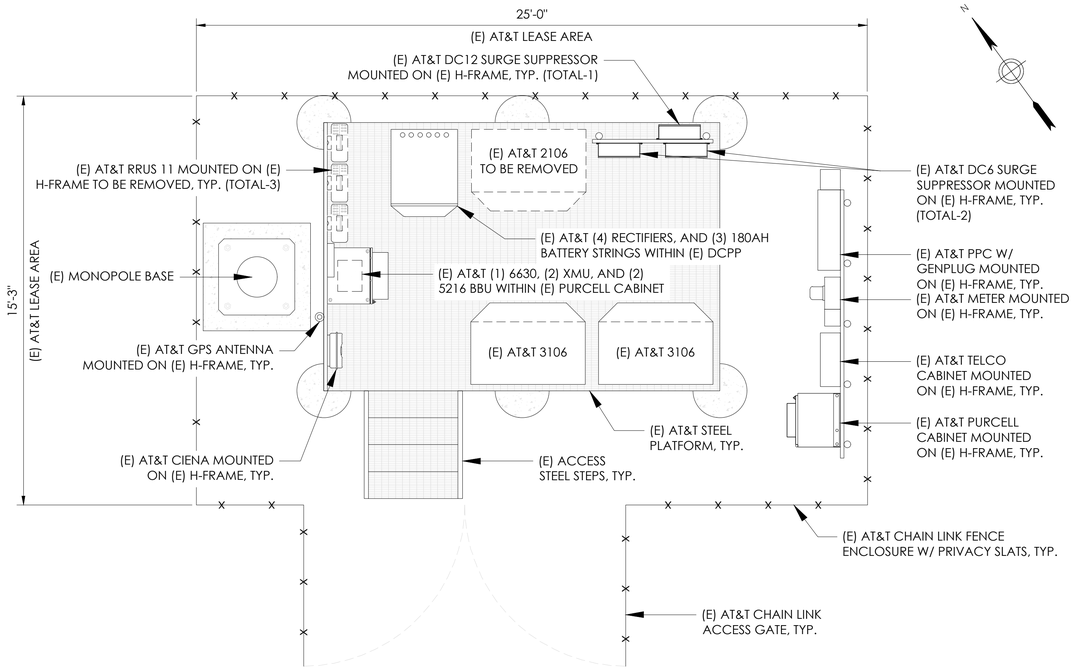

2 EXISTING EQUIPMENT PLAN

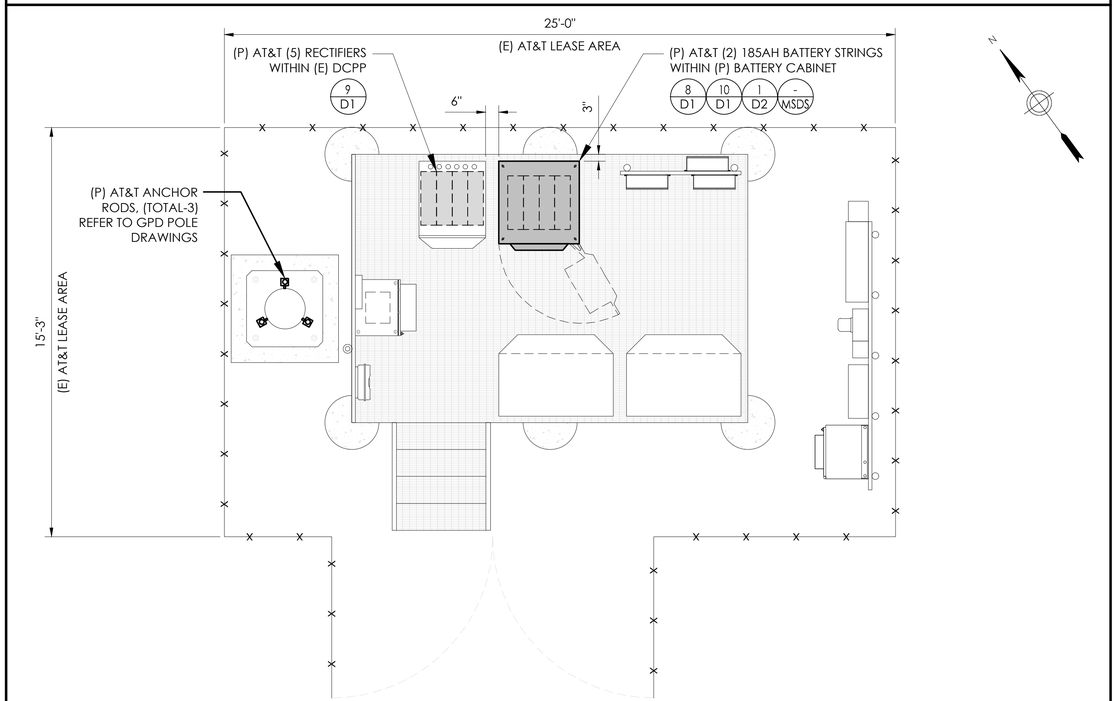

3 PROPOSED EQUIPMENT PLAN

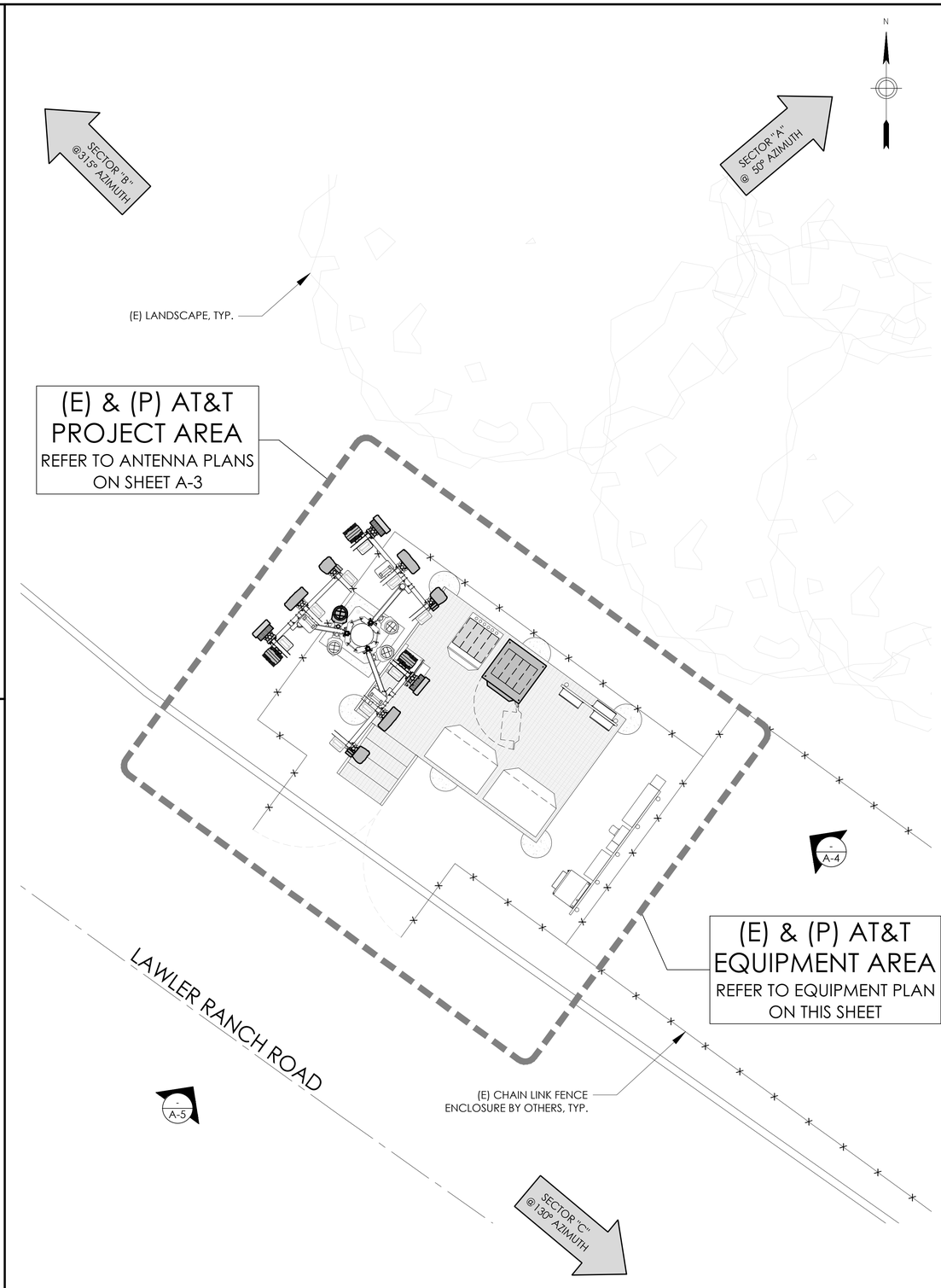

1 ENLARGED SITE PLAN

PREPARED FOR

AT&T

5001 EXECUTIVE PKWY,
SAN RAMON CA 94583

Vendor:

INFRASTRUCTURE PARTNERS

23 MAUCHLY, SUITE 110
IRVINE, CA 92618

P-055023

AT&T Site ID:

CCL05707

REV	DATE	DESCRIPTION	INT.
1	08/27/21	ADD GPD + EME	MM3
0	06/08/21	100% CD	ES/MM
A	05/05/21	90% CD	BH/MM

Licensor:

REGISTERED PROFESSIONAL ENGINEER
SEUNG KUN OH
C 84365
CIVIL
STATE OF CALIFORNIA

SIGNED: 08/27/2021
EXPIRES: 09/30/2023

It is a violation of law for any persons, unless they are acting under the direction of a licensed professional engineer, to alter this document

Issued For:

CCL05707

SHARON HEIGHTS

10 LAWLER RANCH ROAD
MENLO PARK, CA 94025

Sheet Title:

ENLARGED SITE PLAN & EQUIPMENT PLANS

Sheet Number:

A-2

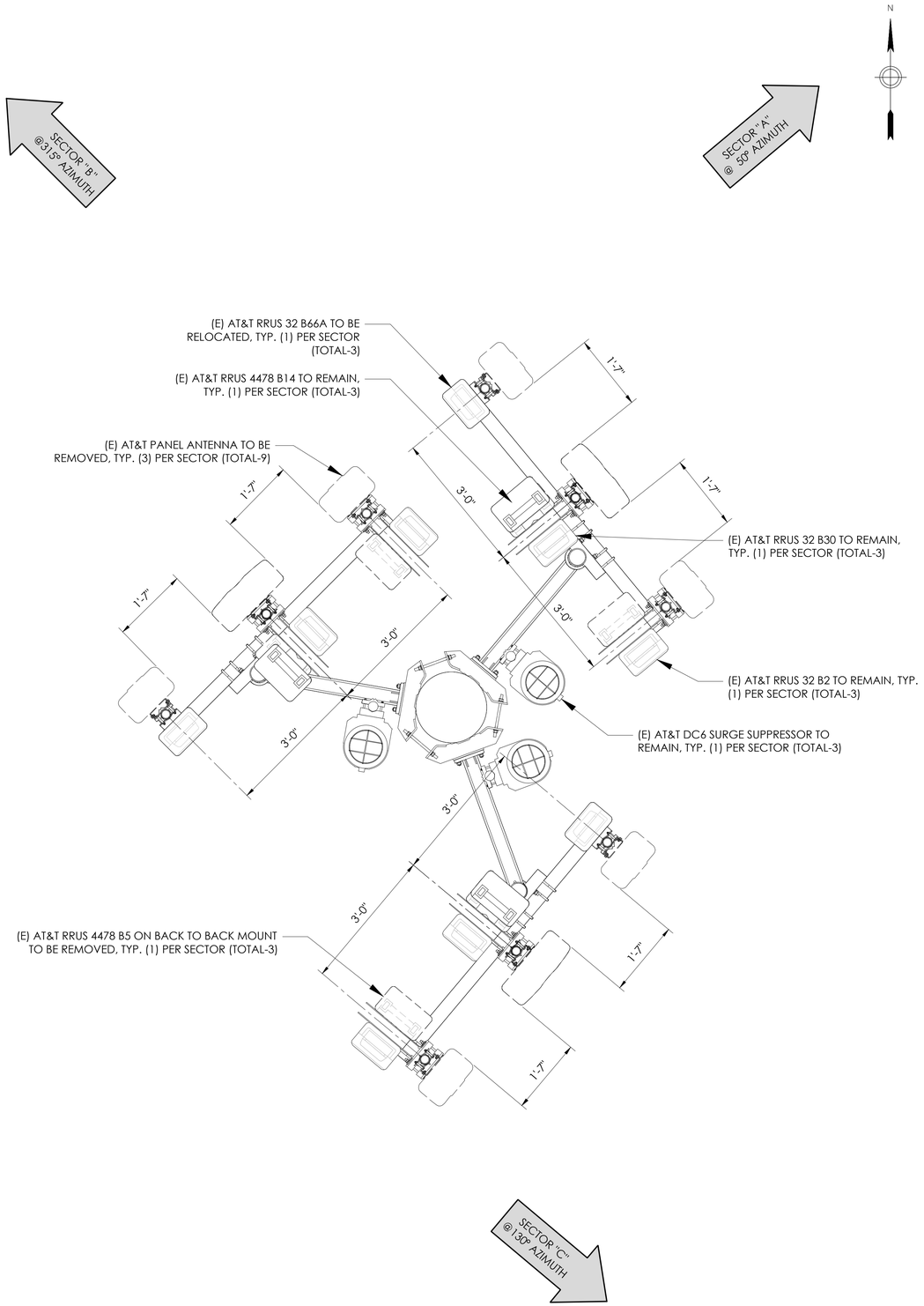

1 EXISTING ANTENNA PLAN

24"x36" SCALE: 3/4" = 1'-0"
11"x17" SCALE: 3/8" = 1'-0"

NOTE TO G.C.:
- NO EQUIPMENT SHALL BE INSTALLED IN FRONT OR AROUND OF THE ANTENNAS OR ANTENNA PATTERNS

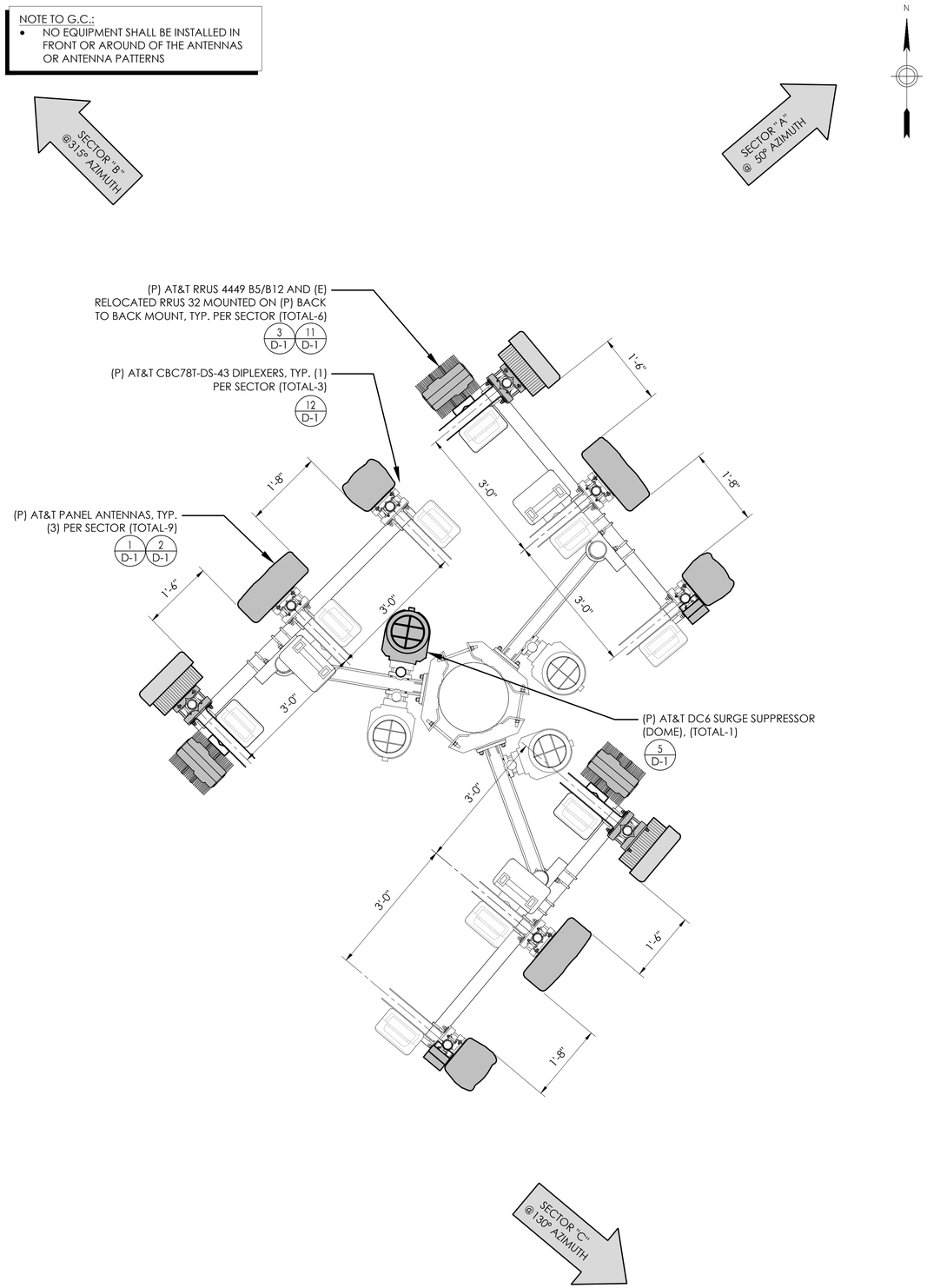

2 PROPOSED ANTENNA PLAN

24"x36" SCALE: 3/4" = 1'-0"
11"x17" SCALE: 3/8" = 1'-0"

PREPARED FOR

AT&T

5001 EXECUTIVE PKWY,
SAN RAMON CA 94583

Vendor:

J5 INFRASTRUCTURE PARTNERS

23 MAUCHLY, SUITE 110
IRVINE, CA 92618

P-055023

AT&T Site ID:

CCL05707

REV	DATE	DESCRIPTION	INT.
1	08/27/21	ADD GPD + EME	MM3
0	06/08/21	100% CD	ES/MM
A	05/05/21	90% CD	BH/MM

Licensor:

REGISTERED PROFESSIONAL ENGINEER
SEUNG KUN OH
C 84365
CIVIL
STATE OF CALIFORNIA

SIGNED: 08/27/2021
EXPIRES: 09/30/2023

It is a violation of law for any persons, unless they are acting under the direction of a licensed professional engineer, to alter this document

Issued For:

CCL05707

SHARON HEIGHTS

10 LAWLER RANCH ROAD
MENLO PARK, CA 94025

Sheet Title:

EXISTING & PROPOSED ANTENNA PLANS

Sheet Number:

A-3

NOTES TO CONTRACTOR:
1. CONTRACTOR IS TO REFER TO AT&T'S MOST CURRENT RADIO FREQUENCY DATA SHEET (RFDS) PRIOR TO CONSTRUCTION.
2. CABLE LENGTHS WERE DETERMINED BASED ON VISUAL INSPECTION DURING SITE-WALK. CONTRACTOR TO VERIFY ACTUAL LENGTH DURING PRE-CONSTRUCTION WALK.
3. CONTRACTOR TO VERIFY PORTS HAVE SUFFICIENT ROOM.

NOTE:
(E) ANTENNA AZIMUTHS ARE ESTIMATED AND ARE TO BE VERIFIED BY RF.

Position	Antenna					RRU, TMA, Diplexer, Etc.				Additional Antenna Information				Line Information			
	Use Existing/	Type		Technology		Existing		Proposed		Azimuth		RAD Center		Coax Cables		Power/Fiber	
	Swap/New	Existing	Final	Existing	Final	Type	Location	Type	Location	Existing	Final	Existing	Final	Existing	Final	Existing	Final
ALPHA																	
1	SWAP	COMMSCOPE JAHH-65A-R3B	QUINTEL QS4658-7	LTE 700 BC 5G 850 LTE 1900, 5G 1900	LTE 700 FNET UMTS 850 LTE 1900, 5G 1900	RRUS 11 B12 RRU 4478 B5 RRUS 32 B2	BOTTOM TOP TOP	RRU 4478 B14 RRUS-32 B2 CBC78T-DS-43	TOP TOP TOP	50	50	20	20	(24) 7/8"	(12) 7/8"	(5) #8 AWG POWER TRUNK CABLES + (3) 1/4" DIA FIBER TRUNK CABLES	(5) #8 AWG + (2) #6 AWG POWER TRUNK CABLES + (4) 1/4" DIA FIBER TRUNK CABLES
2	SWAP	COMMSCOPE NNHH-65A-R4	COMMSCOPE NNH4-65A-R6	LTE 700 FNET LTE WCS	LTE 700 BC/850 5G LTE WCS LTE AWS, 5G AWS	RRU 4478 B14 RRUS 32 B30	TOP TOP	RRU 4449 B5/B12 RRUS-32 B30 RRUS-32 B66A	TOP TOP TOP	50	50	20	20				
3	SWAP	COMMSCOPE JAHH-65A-R3B	ERICSSON AIR 6449 N77	UMTS 850 LTE AWS, 5G AWS	C-BAND 5G	RRUS 32 B66A	TOP	(AIR 6449 N77)	(TOP)	50	50	20	20				
BETA																	
1	SWAP	COMMSCOPE JAHH-65A-R3B	QUINTEL QS4658-7	LTE 700 BC 5G 850 LTE 1900, 5G 1900	LTE 700 FNET UMTS 850 LTE 1900, 5G 1900	RRUS 11 B12 RRU 4478 B5 RRUS 32 B2	BOTTOM TOP TOP	RRU 4478 B14 RRUS-32 B2 CBC78T-DS-43	TOP TOP TOP	315	315	20	20				
2	SWAP	COMMSCOPE NNHH-65A-R4	COMMSCOPE NNH4-65A-R6	LTE 700 FNET LTE WCS	LTE 700 BC/850 5G LTE WCS LTE AWS, 5G AWS	RRU 4478 B14 RRUS 32 B30	TOP TOP	RRU 4449 B5/B12 RRUS-32 B30 RRUS-32 B66A	TOP TOP TOP	315	315	20	20				
3	SWAP	COMMSCOPE JAHH-65A-R3B	ERICSSON AIR 6449 N77	UMTS 850 LTE AWS, 5G AWS	C-BAND 5G	RRUS 32 B66A	TOP	(AIR 6449 N77)	(TOP)	315	315	20	20				
GAMMA																	
1	SWAP	COMMSCOPE JAHH-65A-R3B	QUINTEL QS4658-7	LTE 700 BC 5G 850 LTE 1900, 5G 1900	LTE 700 FNET UMTS 850 LTE 1900, 5G 1900	RRUS 11 B12 RRU 4478 B5 RRUS 32 B2	BOTTOM TOP TOP	RRU 4478 B14 RRUS-32 B2 CBC78T-DS-43	TOP TOP TOP	130	130	20	20				
2	SWAP	COMMSCOPE NNHH-65A-R4	COMMSCOPE NNH4-65A-R6	LTE 700 FNET LTE WCS	LTE 700 BC/850 5G LTE WCS LTE AWS, 5G AWS	RRU 4478 B14 RRUS 32 B30	TOP TOP	RRU 4449 B5/B12 RRUS-32 B30 RRUS-32 B66A	TOP TOP TOP	130	130	20	20				
3	SWAP	COMMSCOPE JAHH-65A-R3B	ERICSSON AIR 6449 N77	UMTS 850 LTE AWS, 5G AWS	C-BAND 5G	RRUS 32 B66A	TOP	(AIR 6449 N77)	(TOP)	130	130	20	20				

1 PROPOSED RF SCHEDULE
N.T.S.

PREPARED FOR

AT&T

5001 EXECUTIVE PKWY.
SAN RAMON CA 94583

Vendor:

J5 INFRASTRUCTURE PARTNERS

23 MAUCHLY, SUITE 110
IRVINE, CA 92618

P-055023

AT&T Site ID:

CCL05707

REV	DATE	DESCRIPTION	INT.
1	08/27/21	ADD GPD + EME	MM3
0	06/08/21	100% CD	ES/MM
A	05/05/21	90% CD	BH/MM

Licensor:

REGISTERED PROFESSIONAL ENGINEER
SEUNG KUN OH
C 84365
CIVIL
STATE OF CALIFORNIA

SIGNED: 08/27/2021
EXPIRES: 09/30/2023

It is a violation of law for any persons, unless they are acting under the direction of a licensed professional engineer, to alter this document

Issued For:

CCL05707

SHARON HEIGHTS

10 LAWLER RANCH ROAD
MENLO PARK, CA 94025

Sheet Title:

PROPOSED RF SCHEDULE

Sheet Number:

A-3.1

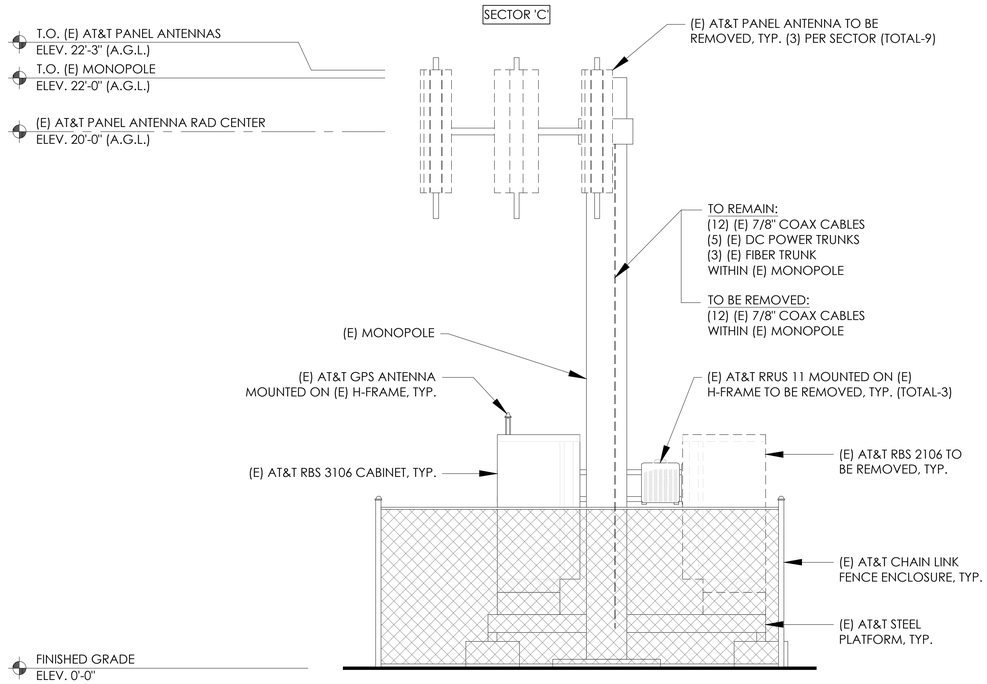

1 EXISTING SOUTHEAST ELEVATION

24"x36" SCALE: 3/8" = 1'-0"
11"x17" SCALE: 3/16" = 1'-0"
2' 1' 0" 2'

NOTE TO G.C.:
- NO EQUIPMENT SHALL BE INSTALLED IN FRONT OR AROUND OF THE ANTENNAS OR ANTENNA PATTERNS

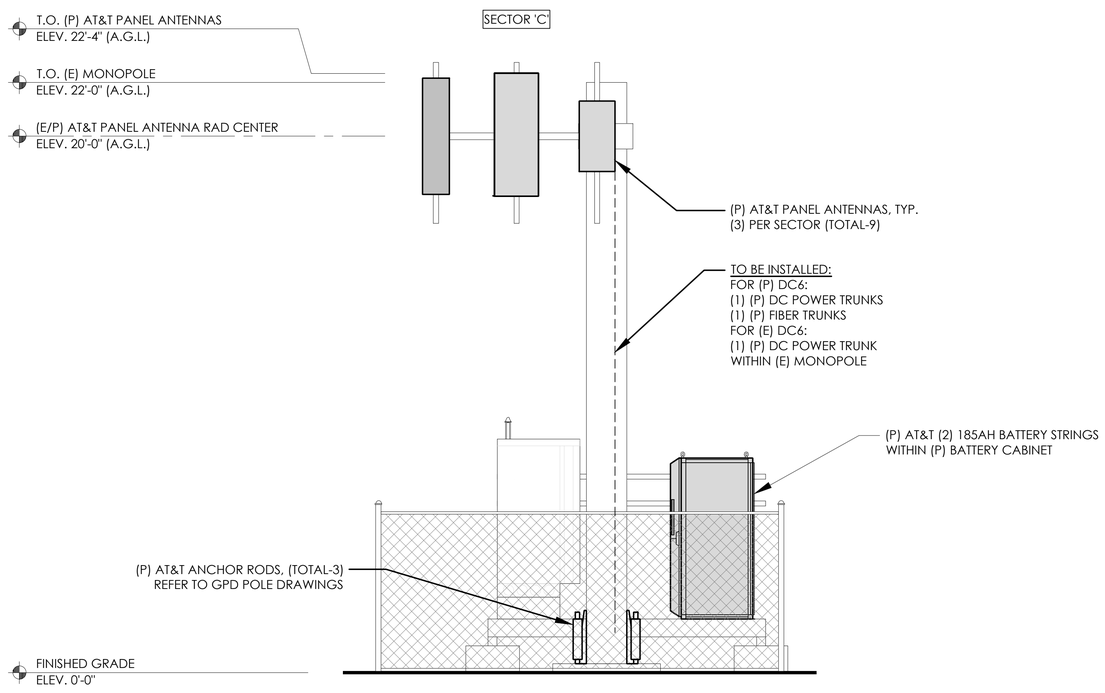

2 PROPOSED SOUTHEAST ELEVATION

24"x36" SCALE: 3/8" = 1'-0"
11"x17" SCALE: 3/16" = 1'-0"
2' 1' 0" 2'

PREPARED FOR

AT&T

5001 EXECUTIVE PKWY,
SAN RAMON CA 94583

Vendor:

J5 INFRASTRUCTURE PARTNERS

23 MAUCHLY, SUITE 110
IRVINE, CA 92618

P-055023

AT&T Site ID:

CCL05707

REV	DATE	DESCRIPTION	INT.
1	08/27/21	ADD GPD + EME	MM3
0	06/08/21	100% CD	ES/MM
A	05/05/21	90% CD	BH/MM

Licensor:

REGISTERED PROFESSIONAL ENGINEER
SEUNG KUN OH
C 84365
CIVIL
STATE OF CALIFORNIA

SIGNED: 08/27/2021
EXPIRES: 09/30/2023

It is a violation of law for any persons, unless they are acting under the direction of a licensed professional engineer, to alter this document

Issued For:

CCL05707

SHARON HEIGHTS

10 LAWLER RANCH ROAD
MENLO PARK, CA 94025

Sheet Title:

SOUTHEAST ELEVATIONS

Sheet Number:

A-4

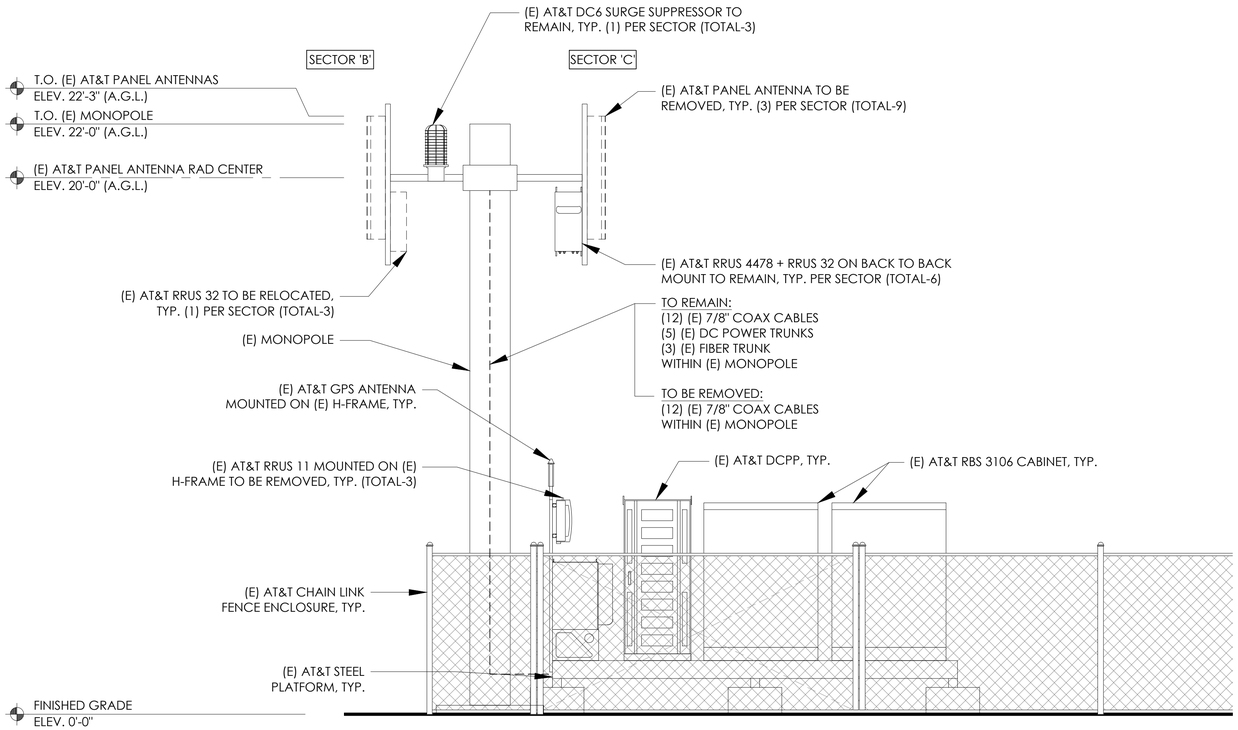

1 EXISTING SOUTHWEST ELEVATION

24"x36" SCALE: 3/8" = 1'-0"
11"x17" SCALE: 3/16" = 1'-0"
2' 1' 0" 2'

NOTE TO G.C.:
- NO EQUIPMENT SHALL BE INSTALLED IN FRONT OR AROUND OF THE ANTENNAS OR ANTENNA PATTERNS

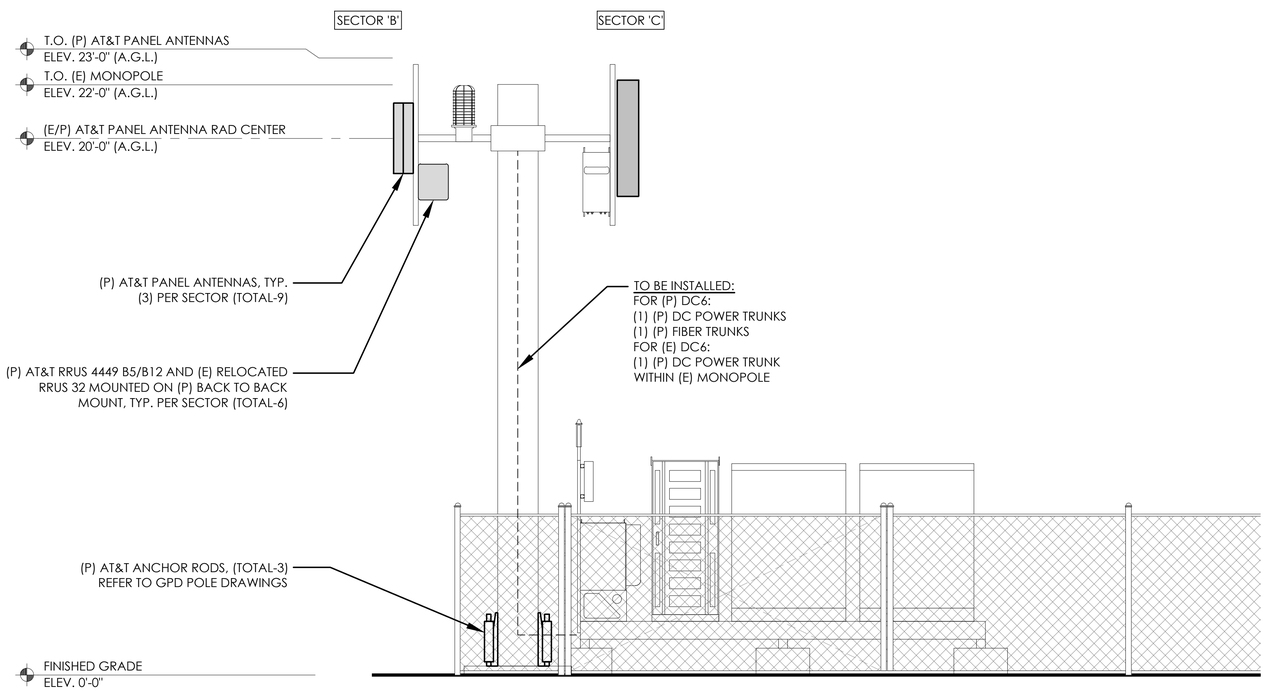

2 PROPOSED SOUTHWEST ELEVATION

24"x36" SCALE: 3/8" = 1'-0"
11"x17" SCALE: 3/16" = 1'-0"
2' 1' 0" 2'

PREPARED FOR

AT&T

5001 EXECUTIVE PKWY,
SAN RAMON CA 94583

Vendor:

J5 INFRASTRUCTURE PARTNERS

23 MAUCHLY, SUITE 110
IRVINE, CA 92618

P-055023

AT&T Site ID:

CCL05707

REV	DATE	DESCRIPTION	INT.
1	08/27/21	ADD GPD + EME	MM3
0	06/08/21	100% CD	ES/MM
A	05/05/21	90% CD	BH/MM

Licensor:

REGISTERED PROFESSIONAL ENGINEER SEUNG KUN OH C 84365 CIVIL STATE OF CALIFORNIA

SIGNED: 08/27/2021
EXPIRES: 09/30/2023

It is a violation of law for any persons, unless they are acting under the direction of a licensed professional engineer, to alter this document

Issued For:

CCL05707

SHARON HEIGHTS

10 LAWLER RANCH ROAD
MENLO PARK, CA 94025

Sheet Title:

SOUTHWEST ELEVATIONS

Sheet Number:

A-5

NOTE:
1. USE MANUFACTURER SUPPLIED MOUNTING HARDWARE.

SPECIFICATIONS

MFG: COMMSCOPE
MODEL: CBC78T-DS-43
HEIGHT: 6.4 IN
WIDTH: 6.9 IN
DEPTH: 4.8 IN

WEIGHT: 11.5 LBS

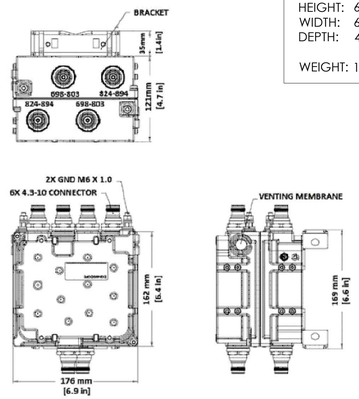

12 TWIN DIPLEXER SPECIFICATIONS
N.T.S.

NOTE:
1. USE MANUFACTURER SUPPLIED MOUNTING HARDWARE.

EQUIPMENT SPECIFICATIONS

MFG: GE ENERGY
MODEL: NEO50AC48
HEIGHT: 1.70 IN
WIDTH: 5.25 IN
DEPTH: 13.85 IN

WEIGHT: 5.2 LBS

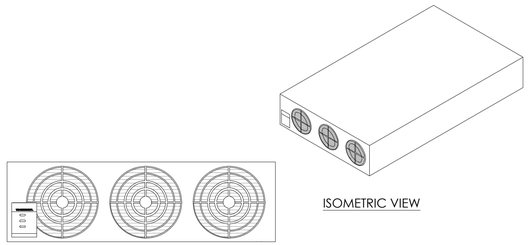

9 RECTIFIER MODULE
N.T.S.

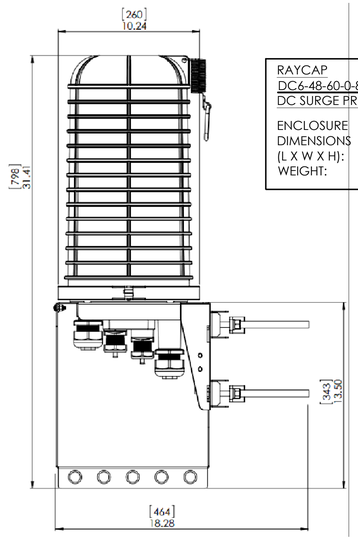

RAYCAP
DC6-48-60-0-8C-EV
DC SURGE PROTECTION SOLUTIONS

ENCLOSURE DIMENSIONS (L X W X H): 18.28" X 10.24" X 31.4
WEIGHT: 26.2 LBS.

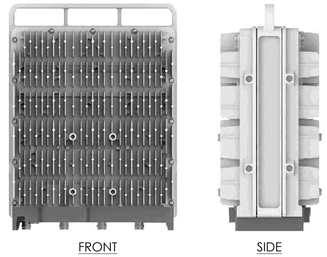

SPECIFICATIONS

MFG: ERICSSON
MODEL: RRUS 4449 B5/B12
HEIGHT: 14.96 IN
WIDTH: 13.19 IN
DEPTH: 10.43 IN

WEIGHT: 73 LBS

MOUNTING KIT OPTIONS:

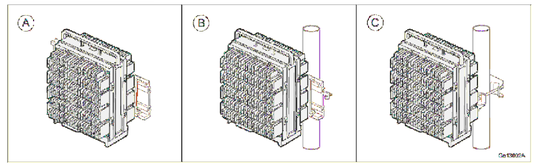

3 RRUS 4449 SPECIFICATION
N.T.S.

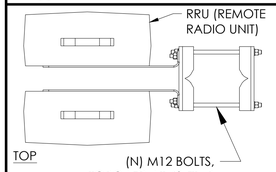

SPECIFICATIONS

MFG: ERICSSON
MODELS: SXK1091946/1
SXK1091946/2
SXK1072892/1 (ADAPTER PLATE)
WEIGHT: 16.8 LBS

FEATURES: ACCOMODTES ALL CURRENT ERICSSON MODEL RRU'S

GC TO UTILIZE ADAPTER PLATE FOR 4449/8843 RADIOS

REFERENCE MANUFACTURER SPECS FOR INSTALLATION

(2) (N) SUPPORT ARM, #CD 990585
(4) (N) LOCK NUT M10 A4, DIN 985, #1405
(8) (N) WASHER M10 A4, DIN 125 A, #1308
(8) (N) BOLT M10x30H A4, DIN 933, #2243
(TORQUED TO 41 N-M)
(TORQUED TO 30.24 FT-LB)
T/B

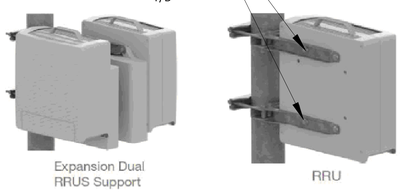

11 RRU MOUNTING BRACKET (BACK TO BACK)
N.T.S.

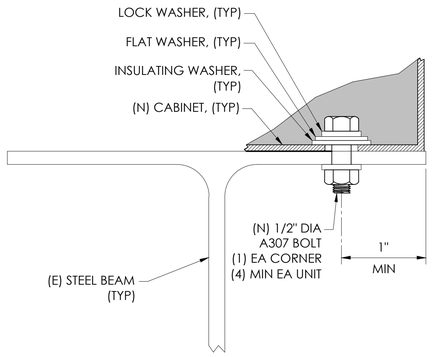

MOUNTING NOTES:
1. REFER TO AND FOLLOW MANUFACTURERS RECOMMENDED SPECIFICATIONS FOR EXACT ANCHOR BOLT LOCATIONS AND QUANTITY FOR EACH SPECIFIED CABINET.
2. CONTRACTOR TO SEAL AROUND ALL BOLTING LOCATIONS.

8 CABINET MOUNTING DETAIL
N.T.S.

POLE MOUNT - USING PRE-INSTALLED EXISTING HARDWARE, MOUNT BRACKET TO 2" TO 4" DIAMETER POLE

MONOPOLE MOUNT - USE 1" STAINLESS STEEL BRACKETS (NOT SUPPLIED) THROUGH SLOTS ON BRACKET TO MOUNT TO MONOPOLE

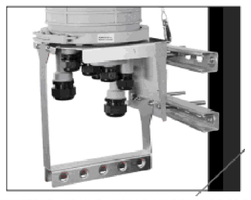

UNISTRUT MOUNT - USING HARDWARE FROM MOUNTING BRACKET MOUNT TO UNISTRUT

5 DC-6 - DC SURGE PROTECTION SOULTIONS
N.T.S.

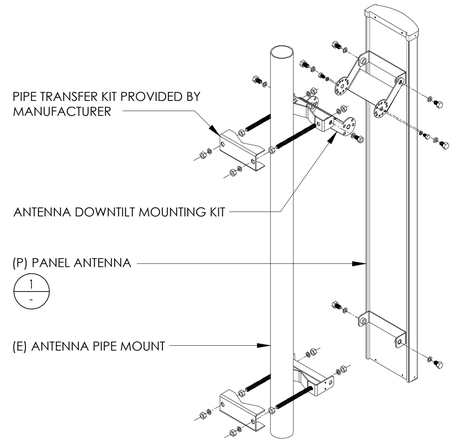

2 ANTENNA MOUNTING DETAIL
N.T.S.

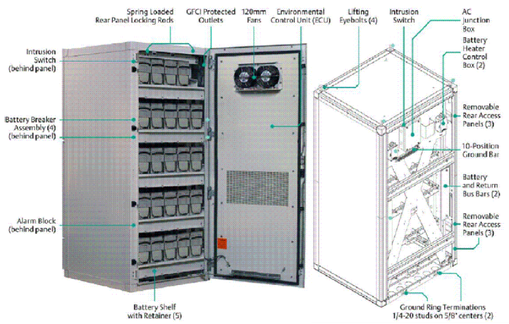

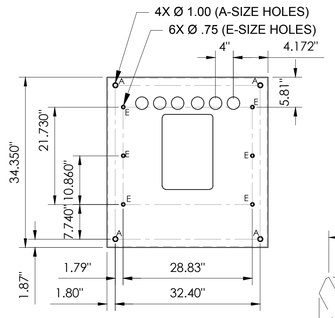

NOTES:
"A" SIZE HOLE POSITIONS EXIST ON PLINTH ONLY, AND ARE FOR CONNECTING PLINTH TO BASE MATERIAL.

"E" SIZE HOLE POSITIONS ARE USED FOR CONNECTING CABINET BASE TO PLINTH, OR DIRECTLY TO BASE MATERIAL, WITHOUT PLINTH.

**PLINTH SHALL BE USED, UNLESS OTHERWISE EXPLICITLY NOTES BY ENGINEER OF RECORD

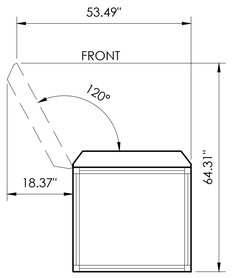

AT&T MOBILITY
NUMBER: NEQ. 15999
EMERSON NUMBER: F1010599
DESCRIPTION (HxWxD): 4" MOUNTING PLINTH

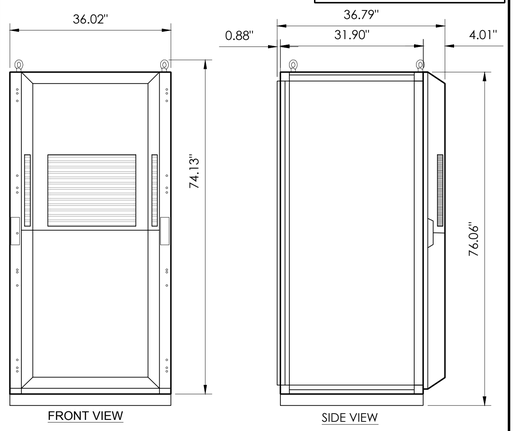

COLOR: OFF-WHITE
CABINET DIMENSIONS: 36.02" W X 34.35" D X 74.13" TALL
MOUNTING PLINTH: 4" TALL

AT&T MOBILITY
NUMBER: NEQ. 15999
EMERSON NUMBER: F1010599
DESCRIPTION (HxWxD): 4" MOUNTING PLINTH

EMERSON NETXTEND BATTERY CABINET				
ITEM	WEIGHT/UNIT (LBS)	QTY	TOTAL WEIGHT (LBS)	
EMPTY CABINET	980	1	980	
MOUNTING PLINTH	150	1	150	
Marathon M12V155FT Battery	119	0	0	
Marathon M12V180FT Battery	133	0	0	
GS PYL12V160FT Battery	116.2	0	0	
GS PYL12V185FT Battery	133.8	8	1070.4	
		TOTAL =	2200.4	LBS

10 EMERSON NETXTEND BATTERY CABINET
N.T.S.

SPECIFICATIONS

MFG / MODEL / PORT: QUINTEL / QS6658-7 / 8-PORT
DIMENSIONS: 52" H X 12" W X 9.6" D
WEIGHT: 68 LBS (W/O MOUNTING KIT)

MFG / MODEL / PORT: COMMSCOPE / NNH4-65A-R6
DIMENSIONS: 55.1" H X 19.6" W X 7.8" D
WEIGHT: 72.8 LBS (W/O MOUNTING KIT)

MFG / MODEL / PORT: ERICSSON / AIR 6449 N77D
DIMENSIONS: 30.60" H X 15.90" W X 10.60" D
WEIGHT: 83.80 LBS (W/O MOUNTING KIT)

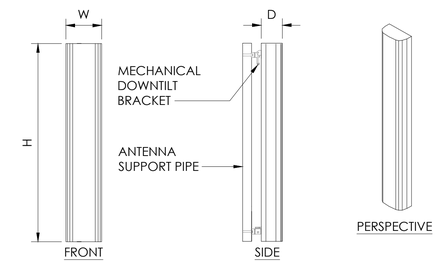

1 ANTENNA SPECIFICATION
N.T.S.

PREPARED FOR

AT&T

5001 EXECUTIVE PKWY,
SAN RAMON CA 94583

Vendor:

J5 INFRASTRUCTURE PARTNERS

23 MAUCHLY, SUITE 110
IRVINE, CA 92618

P-055023

AT&T Site ID:

CCL05707

REV	DATE	DESCRIPTION	INT.
1	08/27/21	ADD GPD + EME	MM3
0	06/08/21	100% CD	ES/MM
A	05/05/21	90% CD	BH/MM

Licensor:

REGISTERED PROFESSIONAL ENGINEER
SEUNG KUN OH
C 84365
CIVIL
STATE OF CALIFORNIA

SIGNED: 08/27/2021
EXPIRES: 09/30/2023

It is a violation of law for any persons, unless they are acting under the direction of a licensed professional engineer, to alter this document

Issued For:

CCL05707

SHARON HEIGHTS

10 LAWLER RANCH ROAD
MENLO PARK, CA 94025

Sheet Title:

DETAILS

Sheet Number:

D-1

12 NOT USED
N.T.S.

9 NOT USED
N.T.S.

6 NOT USED
N.T.S.

3 NOT USED
N.T.S.

11 NOT USED
N.T.S.

8 NOT USED
N.T.S.

5 NOT USED
N.T.S.

2 NOT USED
N.T.S.

10 NOT USED
N.T.S.

7 NOT USED
N.T.S.

4 NOT USED
N.T.S.

NOTE:
1. CONTRACTOR TO CONFIRM HOLE SIZE & LOCATIONS WITH MANUFACTURER'S SPECIFICATION PRIOR TO ANY DRILLING.

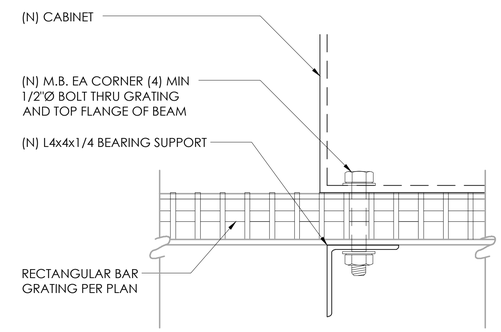

1 CABINET MOUNTING DETAIL (IF REQUIRED)
N.T.S.

PREPARED FOR

AT&T

5001 EXECUTIVE PKWY,
SAN RAMON CA 94583

Vendor:

J5 INFRASTRUCTURE PARTNERS

23 MAUCHLY, SUITE 110
IRVINE, CA 92618

P-055023

AT&T Site ID:

CCL05707

REV	DATE	DESCRIPTION	INT.
1	08/27/21	ADD GPD + EME	MM3
0	06/08/21	100% CD	ES/MM
A	05/05/21	90% CD	BH/MM

Licensor:

REGISTERED PROFESSIONAL ENGINEER
SEUNG KUN OH
C 84365
CIVIL
STATE OF CALIFORNIA

SIGNED: 08/27/2021
EXPIRES: 09/30/2023

It is a violation of law for any persons, unless they are acting under the direction of a licensed professional engineer, to alter this document

Issued For:

CCL05707

SHARON HEIGHTS

10 LAWLER RANCH ROAD
MENLO PARK, CA 94025

Sheet Title:

DETAILS

Sheet Number:

D-2

GROUNDING NOTES:

1. ALL DETAILS ARE SHOWN IN GENERAL TERMS. ACTUAL GROUNDING INSTALLATION REQUIREMENTS AND CONSTRUCTION ACCORDING TO SITE CONDITIONS.
2. ALL GROUNDING CONDUCTORS: #2 AWG SOLID BARE TINNED COPPER WIRE UNLESS OTHERWISE NOTED.
3. GROUND BAR LOCATED IN BASE OF EQUIPMENT WILL BE PROVIDED, FURNISHED AND INSTALLED BY THE VENDOR.
4. ALL BELOW GRADE CONNECTIONS: EXOTHERMIC WELD TYPE, ABOVE GRADE CONNECTIONS: EXOTHERMIC WELD TYPE.
5. GROUND RING SHALL BE LOCATED A MINIMUM OF 24" BELOW GRADE OR 6" MINIMUM BELOW THE FROST LINE.
6. INSTALL GROUND CONDUCTORS AND GROUND ROD MINIMUM OF 1'-0" FROM EQUIPMENT CONCRETE SLAB, SPREAD FOOTING, OR FENCE.
7. EXOTHERMIC WELD GROUND CONNECTION TO FENCE POST: TREAT WITH A COLD GALVANIZED SPRAY.
8. GROUND BARS:
   A) EQUIPMENT GROUND BUS BAR (EGB) LOCATED AT THE BOTTOM OF ANTENNA POLE/MAST FOR MAKING GROUNDING JUMPER CONNECTIONS TO COAX FEEDER CABLES SHALL BE FURNISHED AND INSTALLED BY ELECTRICAL CONTRACTOR. JUMPERS (FURNISHED BY OWNERS) SHALL BE INSTALLED AND CONNECTED BY ELECTRICAL CONTRACTOR.
9. ALL GROUNDING INSTALLATIONS AND CONNECTIONS SHALL BE MADE BY ELECTRICAL CONTRACTOR.
10. OBSERVE N.E.C. AND LOCAL UTILITY REQUIREMENTS FOR ELECTRICAL SERVICE GROUNDING.
11. GROUNDING ATTACHMENT TO TOWER SHALL BE AS PER MANUFACTURER'S RECOMMENDATIONS OR AT GROUNDING POINTS PROVIDED (2 MINIMUM).
12. IF EQUIPMENT IS IN A C.L. FENCE ENCLOSURE, GROUND ONLY CORNER POSTS AND SUPPORT POSTS OF GATE. IF CHAIN LINK LID IS USED, THEN GROUND LID ALSO.
13. GROUNDING AT PPC CABINET SHALL BE VERTICALLY INSTALLED.
14. ALL GROUNDING FOR ANTENNAS SHALL BE CONNECTED SO THAT IT WILL BY-PASS MAIN BUSS BAR.
15. ALL EMT RUNS SHALL BE GROUNDED AND HAVE A BUSHING, NO PVC ABOVE GROUND.
16. USE SEPARATE HOLES FOR GROUNDING AT BUSS BAR. NO "DOUBLE-UP" OF LUGS.
17. POWER AND TELCO CABINETS SHALL BE GROUNDED (BONDED) TOGETHER.
18. NO LB'S ALLOWED ON GROUNDING.
19. PROVIDE STAINLESS STEEL CLAMP AND BRASS TAGS ON COAX AT ANTENNAS AND DOGHOUSE.
20. ALL ELECTRICAL AND GROUNDING AT THE CELL SITE SHALL COMPLY WITH THE NATIONAL ELECTRICAL CODE (NEC), NATIONAL FIRE PROTECTION ASSOCIATION (NFPA) 780 (LATEST EDITION), AND MANUFACTURER SPECIFICATION.
21. IF THE AC PANEL IN THE POWER CABINET IS WIRED AS SERVICE ENTRANCE, THE AC SERVICE GROUND CONDUCTOR SHALL BE CONNECTED TO GROUND ELECTRODE SYSTEM. WHEN THE AC PANEL IN THE POWER CABINET IS CONSIDERED A SUB-PANEL, THE GROUND WIRE SHALL BE INSTALLED IN THE AC POWER CONDUIT. THE INSTALLATION SHALL BE PER LOCAL AND NATIONAL ELECTRIC CODE (NFPA-70).
22. EXOTHERMIC WELDING IS RECOMMENDED FOR GROUNDING CONNECTION WHERE PRACTICAL. OTHERWISE, THE CONNECTION SHALL BE MADE USING COMPRESSION TYPE-2 HOLES. LONG BARREL LUGS OR DOUBLE CRIMP CLAMP "C" CLAMP. THE COPPER CABLES SHALL BE COATED WITH ANTIOXIDANT (COPPER SHIELD) BEFORE MAKING THE CONNECTIONS. THE MANUFACTURER'S TORQUING RECOMMENDATIONS ON THE BOLT ASSEMBLY TO SECURE CONNECTIONS SHALL BE FOLLOWED.
23. THE ANTENNA CABLES SHALL BE GROUNDED AT THE TOP AND BOTTOM OF THE VERTICAL RUN FOR LIGHTING PROTECTION. THE ANTENNA CABLE SHIELD SHALL BE BONDED TO A COPPER GROUND BUSS AT THE LOWER MOST POINT OF A VERTICAL RUN JUST BEFORE IT BEGINS TO BEND TOWARD THE HORIZONTAL PLANE. WIRE RUNS TO GROUND SHALL BE KEPT AS STRAIGHT AND SHORT AS POSSIBLE. ANTENNA CABLE SHIELD SHALL BE GROUNDED JUST BEFORE ENTERING THE CELL CABINET. ANY ANTENNA CABLES OVER 200 FEET IN LENGTH SHALL ALSO BE EQUIPPED WITH ADDITIONAL GROUNDING AT MID-POINT.
24. ALL GROUNDING CONDUCTORS INSIDE THE BUILDING SHALL BE RUN IN CONDUIT RACEWAY SYSTEM, AND SHALL BE INSTALLED AS STRAIGHT AS PRACTICAL WITH MINOR BENDS TO AVOID OBSTRUCTIONS. THE BENDING RADIUS OF ANY #2 GROUNDING CONDUCTOR IS 8". PVC RACEWAY MAY BE FLEXIBLE OR RIGID PER THE FIELD CONDITIONS. GROUNDING CONDUCTORS SHALL NOT MAKE CONTACT WITH ANY METALLIC CONDUITS, SURFACES OR EQUIPMENT.
25. PROVIDE PVC SLEEVES WHERE GROUNDING CONDUCTORS PASS THROUGH THE BUILDING WALLS AND /OR CEILINGS.
26. INSTALL GROUND BUSHINGS ON ALL METALLIC CONDUITS AND BOND TO THE EQUIPMENT GROUND BUSS IN THE PANEL BOARD.
27. GROUND ANTENNA BASES, FRAMES, CABLE RACKS AND OTHER METALLIC COMPONENTS WITH #2 GROUNDING CONDUCTORS AND CONNECT TO INSULATED SURFACE MOUNTED GROUND BARS. CONNECTION DETAILS SHALL FOLLOW MANUFACTURER'S SPECIFICATIONS FOR GROUNDING.
28. ALL PROPOSED GROUNDING CONDUCTORS SHALL BE ROUTED AND CONNECTED TO THE MAIN GROUND BAR OR EXISTING GROUND RING.

4 GROUNDING NOTES
N.T.S.

NOTES:
1. GROUND BAR LOCATION IS SCHEMATIC AS SHOWN ON THIS SHEET AND ACTUAL LOCATION OF INSTALLATION WILL BE DETERMINED BY THE INSTALLER.
2. REFER TO ANTENNA PLAN FOR EXACT NUMBER OF ANTENNA, RRU AND DC SURGE SUPPRESSOR

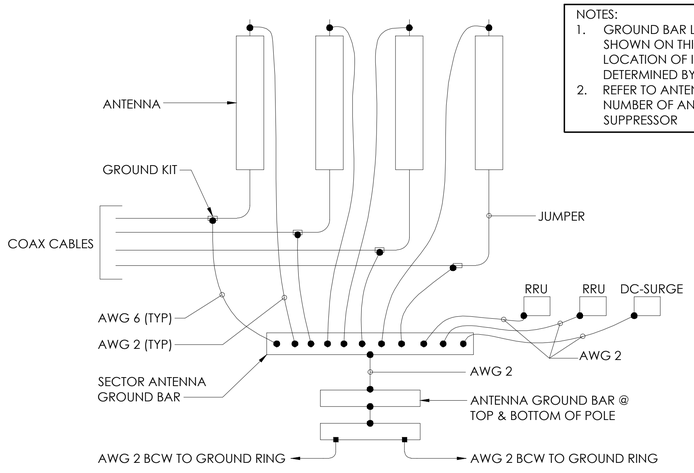

3 TYP. ANTENNA GROUNDING DIAGRAM
N.T.S.

KEY NOTES:

1. (E) ANTENNA GROUND BAR TO BE VERIFIED @ FIELD
2. AWG 2 INSULATED COPPER GROUND WIRE FROM (N) RRUS AND DC6 TO (E) ANTENNA GROUND BAR
3. AWG 6 INSULATED COPPER GROUND WIRE FROM NEW ANTENNA GROUND KIT TO (E) ANTENNA GROUND BAR

NOTES:
1. REFER TO TYP. ANTENNA GROUNDING DIAGRAM
2. (E) GROUND WIRES ARE NOT SHOWN FOR CLARITY

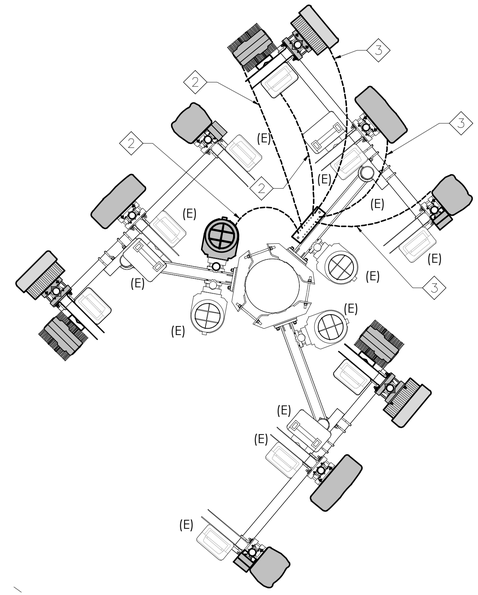

2 ANTENNA GROUNDING PLAN, TYP. PER SECTOR
N.T.S

KEY NOTES:

1. (E) EQUIPMENT GROUND BAR TO BE VERIFIED @ FIELD
2. AWG 2 INSULATED COPPER GROUND WIRE FROM (N) EQUIPMENT

NOTES:
1. (E) GROUND WIRES ARE NOT SHOWN FOR CLARITY

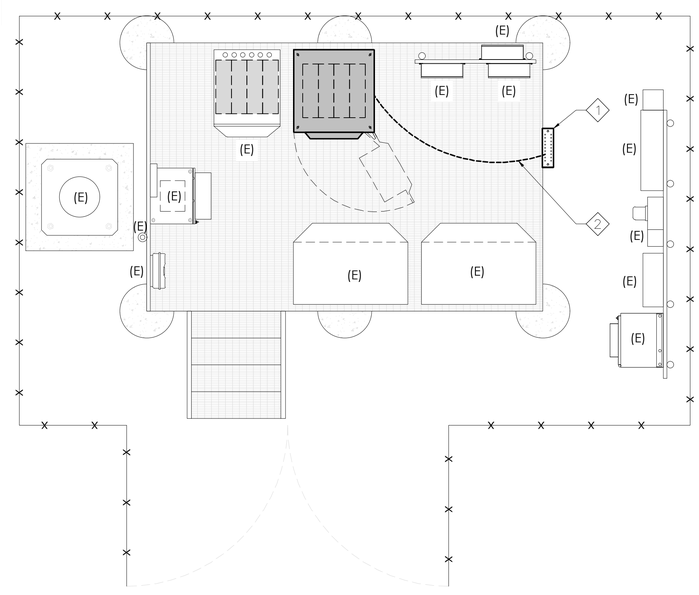

1 EQUIPMENT GROUNDING PLAN
N.T.S

PREPARED FOR

AT&T

5001 EXECUTIVE PKWY,
SAN RAMON CA 94583

Vendor:

INFRASTRUCTURE PARTNERS

2030 MAIN STREET, SUITE 200
IRVINE, CA 92614

P-055023

AT&T Site ID:

CCL05707

REV	DATE	DESCRIPTION	INT.
0	06/08/21	100% CD	ES/MM
A	05/05/21	90% CD	BH/MM

Licensor:

LICENSED PROFESSIONAL ENGINEER WILLIAM KARL FEIGL E 23512 ELECTRICAL STATE OF CALIFORNIA

It is a violation of law for any persons, unless they are acting under the direction of a licensed professional engineer, to alter this document

Issued For:

CCL05707

SHARON HEIGHTS

10 LAWLER RANCH ROAD
MENLO PARK, CA 94025

Sheet Title:

GROUNDING PLANS & NOTES

Sheet Number:

G-1

NOTES:

1. DO NOT INSTALL CABLE GROUND KIT AT A BEND AND ALWAYS DIRECT GROUND WIRE DOWN TO GROUND BAR
2. GROUNDING KIT SHALL BE TYPE AND PART NUMBER AS SUPPLIED OR RECOMMENDED BY CABLE MFR
3. WEATHER PROOFING SHALL BE TYPE AND PART NUMBER AS SUPPLIED OR RECOMMENDED BY THE CABLE MFR

10 NOT USED
N.T.S.

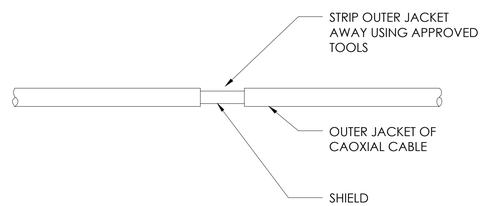

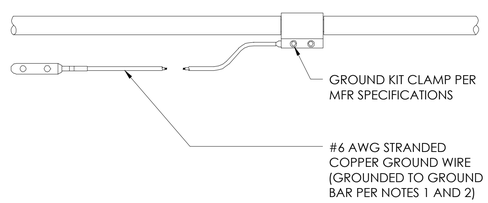

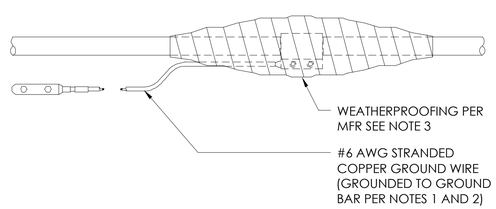

7 GROUND KIT
N.T.S.

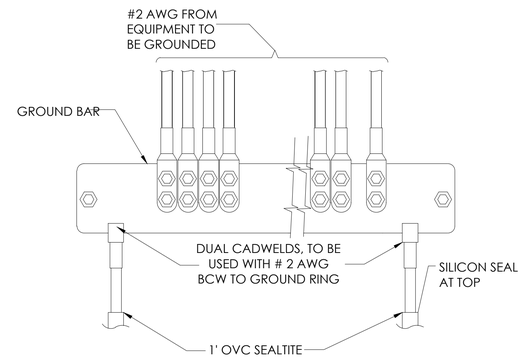

NOTE:
1. CONTRACTOR TO UTILIZE KOPR-SHIELD (THANS & BETTS) ON ALL LUG CONNECTIONS OR APPROVED EQUAL
2. ALL LUGS TO BE DUAL HOLE LONG BARREL AND CRIMPED TWICE WITH MFR'S RECOMMENDED TOOL

5 GROUND BAR CONNECTION
N.T.S.

3 NOT USED
N.T.S.

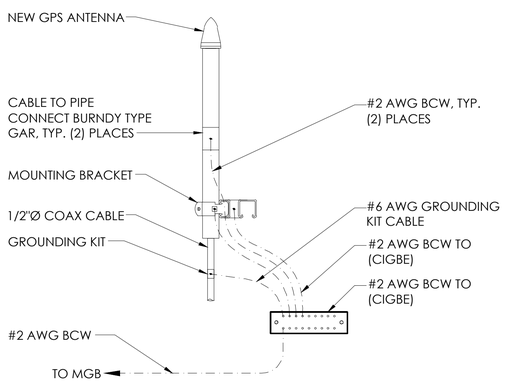

9 GPS ANTENNA GROUNDING
N.T.S.

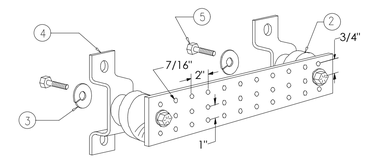

LEGEND

1- COPPER GROUND BAR, "X 1/4"X 20", NEWTON INSTRUMENT CO. CAT. NO. B-6142 OR EQUAL. HOLE CENTERS TO MATCH NEMA DOUBLE LUG CONFIGURATION. (ACTUAL GROUND BAR SIZE WILL VARY BASED ON NUMBER OF GROUND CONNECTIONS)

2- INSULATORS, NEWTON INSTRUMENT CAT. NO. 3061-4 OR EQUAL

3- 5/8" LOCKWASHERS, NEWTON INSTRUMENT CO. CAT. NO. 3015-8 OR EQUAL

4- WALL MOUNTING BRACKET, NEWTON INSTRUMENT CO. CAT NO. A-6056 OR EQUAL

5- 5/8-11 X 1" HHCS BOLTS, NEWTON INSTRUMENT CO. CAT NO. 3012-1 OR EQUAL

6- INSULATORS SHALL BE ELIMINATED WHEN BONDING DIRECTLY TO TOWER/MONOPOLE STRUCTURE. CONNECTION TO TOWER/MONOPOLE STRUCTURE SHALL BE PER MANUFACTURERS RECOMMENDATIONS.

NOTE: ALL HARDWARE SHALL BE STAINLESS STEEL

4 GROUND BAR DETAIL
N.T.S.

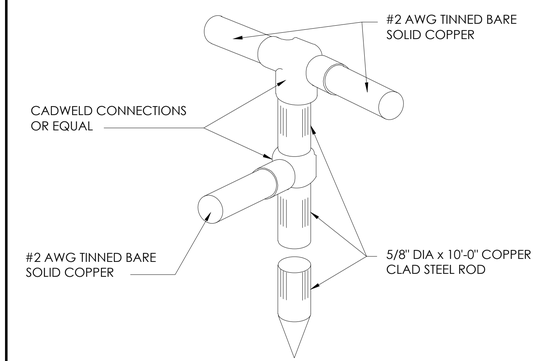

2 GROUND ROD DETAIL
N.T.S.

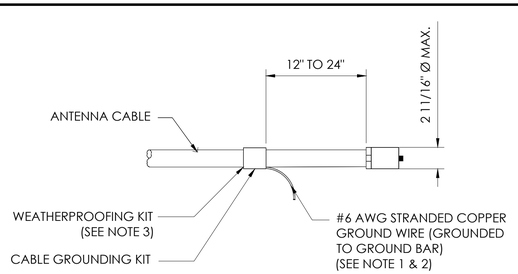

NOTE:

1 DO NOT INSTALL CABLE GROUND KIT AT A BEND AND ALWAYS DIRECT WIRE DOWN TO GROUND BAR.
2. GROUNDING KIT SHALL BE TYPE AND PART NUMBER AS SUPPLIED OR RECOMMENDED BY CABLE MANUFACTURER.
3. WEATHER PROOFING SHALL BE (TYPE AND PART NUMBER AS SUPPLIED OR RECOMMENDED BY CABLE MANUFACTURER.)

8 CONNECTION OF GROUND KIT TO ANTENNA CABLE
N.T.S.

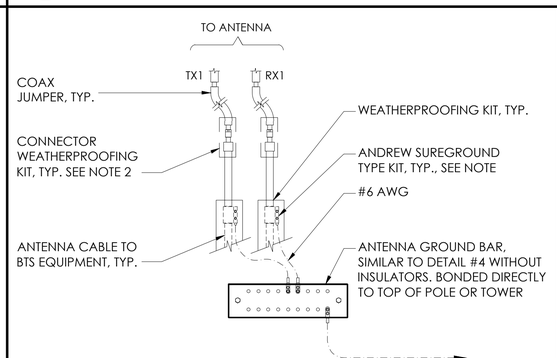

NOTE:

1. DO NOT INSTALL CABLE GROUND KIT AT A BEND AND ALWAYS DIRECT GROUND WIRE DOWN TO ANTENNA GROUND BAR.
2. WEATHER PROOFING SHALL BE ANDREW TWO-PART TAPE KIT. COLD SHRINK SHALL NOT BE USED

6 GROUND CONNECTION TO GROUND BAR
N.T.S.

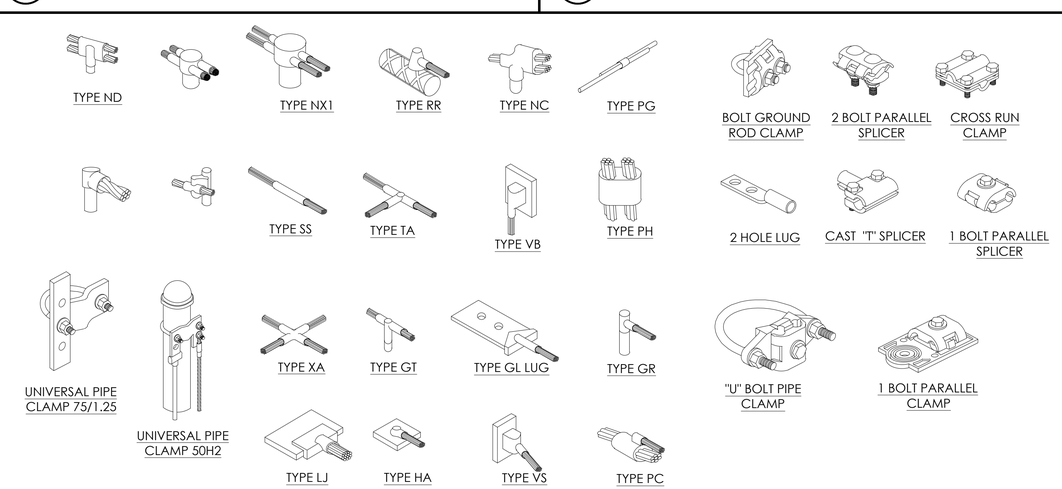

1 TYPICAL MECHANICAL CONNECTIONS
N.T.S.

PREPARED FOR

AT&T

5001 EXECUTIVE PKWY,
SAN RAMON CA 94583

Vendor:

J5 INFRASTRUCTURE PARTNERS

2030 MAIN STREET, SUITE 200
IRVINE, CA 92614

P-055023

AT&T Site ID:

CCL05707

REV	DATE	DESCRIPTION	INT.
0	06/08/21	100% CD	ES/MM
A	05/05/21	90% CD	BH/MM

Licensor:

REGISTERED PROFESSIONAL ENGINEER
CHRIS WILLIAM KARSTEDT
E 23512
ELECTRICAL
STATE OF CALIFORNIA

It is a violation of law for any persons, unless they are acting under the direction of a licensed professional engineer, to alter this document

Issued For:

CCL05707

SHARON HEIGHTS

10 LAWLER RANCH ROAD
MENLO PARK, CA 94025

Sheet Title:

GROUNDING DETAILS

Sheet Number:

G-2

VOLTAGE: 120/240V, 1-PHASE, 3W, 200A, 42 KAIC — MOUNTING: SURFACE
MAIN CB: 2P/200A — NEMA: 1
PANEL 'A' — LOCATION: @ LEASE AREA

VOLT AMPS PHASE A	VOLT AMPS PHASE B	DESCRIPTION	POLE	BKR	CKT	A B	CKT	BKR	POLE	DESCRIPTION	VOLT AMPS PHASE A	VOLT AMPS PHASE B
2000		RBA 72 FEED 1	2	40	1		2	30	2	SURGE		
	2000				3		4					
2000		RBA 72 FEED 2	2	40	5		6	20	1	GFI	180	
	2000				7		8	30	1	AT&T CAB		360
		UMTS 1900 SEC CAB	2	50	9		10	50	2	850/1900 PRI CAB	3600	
		(off)			11		12					3600
		RBA 72 FEED 3	2	30	13		14	1	20	LIGHTS	100	
		(OFF)			15		16	1	20	IRRIGATION (OFF)		
		RBA 72 FEED 4	2	30	17		18	2	40	RBA 72 FEED 5		
		(OFF)			19		20			(OFF)		
		RBA 72 GFI (OFF)	1	30	21		22	2	40	RBA 72 FEED 6		
		SPACE			23		24			(OFF)		
4000	4000					VA/LINE					3880	3960

PHASE A = 7880 VA — PHASE B = 7960 VA

CONNECTED LOAD: 15840 VA

CONNECTED AMPS: 66 A

2 EXISTING AC PANEL SCHEDULE

VOLTAGE: 120/240V, 1-PHASE, 3W, 200A, 42 KAIC — MOUNTING: SURFACE
MAIN CB: 2P/200A — NEMA: 1
PANEL 'A' — LOCATION: @ LEASE AREA

VOLT AMPS PHASE A	VOLT AMPS PHASE B	DESCRIPTION	POLE	BKR	CKT	A B	CKT	BKR	POLE	DESCRIPTION	VOLT AMPS PHASE A	VOLT AMPS PHASE B
2000		RBA 72 FEED 1	2	40	1		2	30	2	SURGE		
	2000				3		4					
2000		RBA 72 FEED 2	2	40	5		6	20	1	GFI	180	
	2000				7		8	30	1	AT&T CAB		360
360		Battery Heater 1	1	15	9		10	50	2	850/1900 PRI CAB	3600	
	360	Battery Heater 2	1	15	11		12					3600
2000		RBA 72 FEED 3	2	30	13		14	1	20	LIGHTS	100	
					15		16	1	20	IRRIGATION (OFF)		
		RBA 72 FEED 4	2	30	17		18	2	40	RBA 72 FEED 5	2000	
		(OFF)			19		20					2000
		RBA 72 GFI (OFF)	1	30	21		22	2	40	RBA 72 FEED 6	2000	
	180	BATTERY GFI	1	20	23		24					2000
6360	4540					VA/LINE					7880	7960

PHASE A = 14240 VA — PHASE B = 12500 VA

CONNECTED LOAD: 26740 VA

CONNECTED AMPS: 111 A

3 PROPOSED AC PANEL SCHEDULE

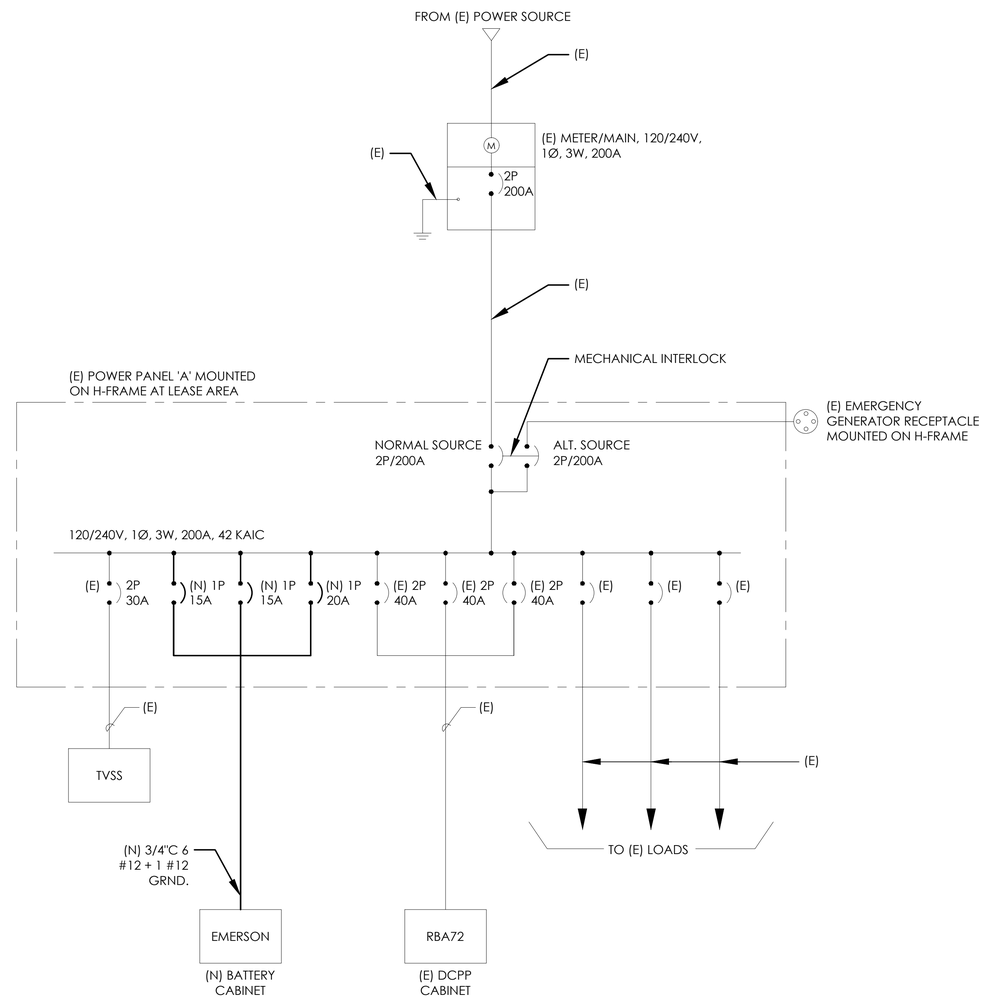

1 AC SINGLE LINE DIAGRAM

PREPARED FOR

AT&T

5001 EXECUTIVE PKWY.
SAN RAMON CA 94583

Vendor:

J5 INFRASTRUCTURE PARTNERS

2030 MAIN STREET, SUITE 200
IRVINE, CA 92614

P-055023

AT&T Site ID:

CCL05707

REV	DATE	DESCRIPTION	INT.
0	06/08/21	100% CD	ES/MM
A	05/05/21	90% CD	BH/MM

Licensor:

LICENSED PROFESSIONAL ENGINEER ERIC WILLIAM KARSTETTER E 23512 ELECTRICAL STATE OF CALIFORNIA

Issued For:

CCL05707

SHARON HEIGHTS

10 LAWLER RANCH ROAD
MENLO PARK, CA 94025

Sheet Title:

SINGLE LINE DIAGRAM & AC PANEL SCHEDULE

Sheet Number:

E-1

Diagram - Sector	A	Diagram File Name - CCL05707_PD_V3.vsd					
Atoll Site Name -	CNU5707	Location Name -	SHARON HEIGHTS	Market -	SAN FRANCISCO	Market Cluster -	SAN FRANCISCO/SACRAMENTO
Comments:							

NOTES TO CONTRACTOR:
1. CONTRACTOR IS TO REFER TO AT&T'S MOST CURRENT RADIO FREQUENCY DATA SHEET (RFDS) PRIOR TO CONSTRUCTION.

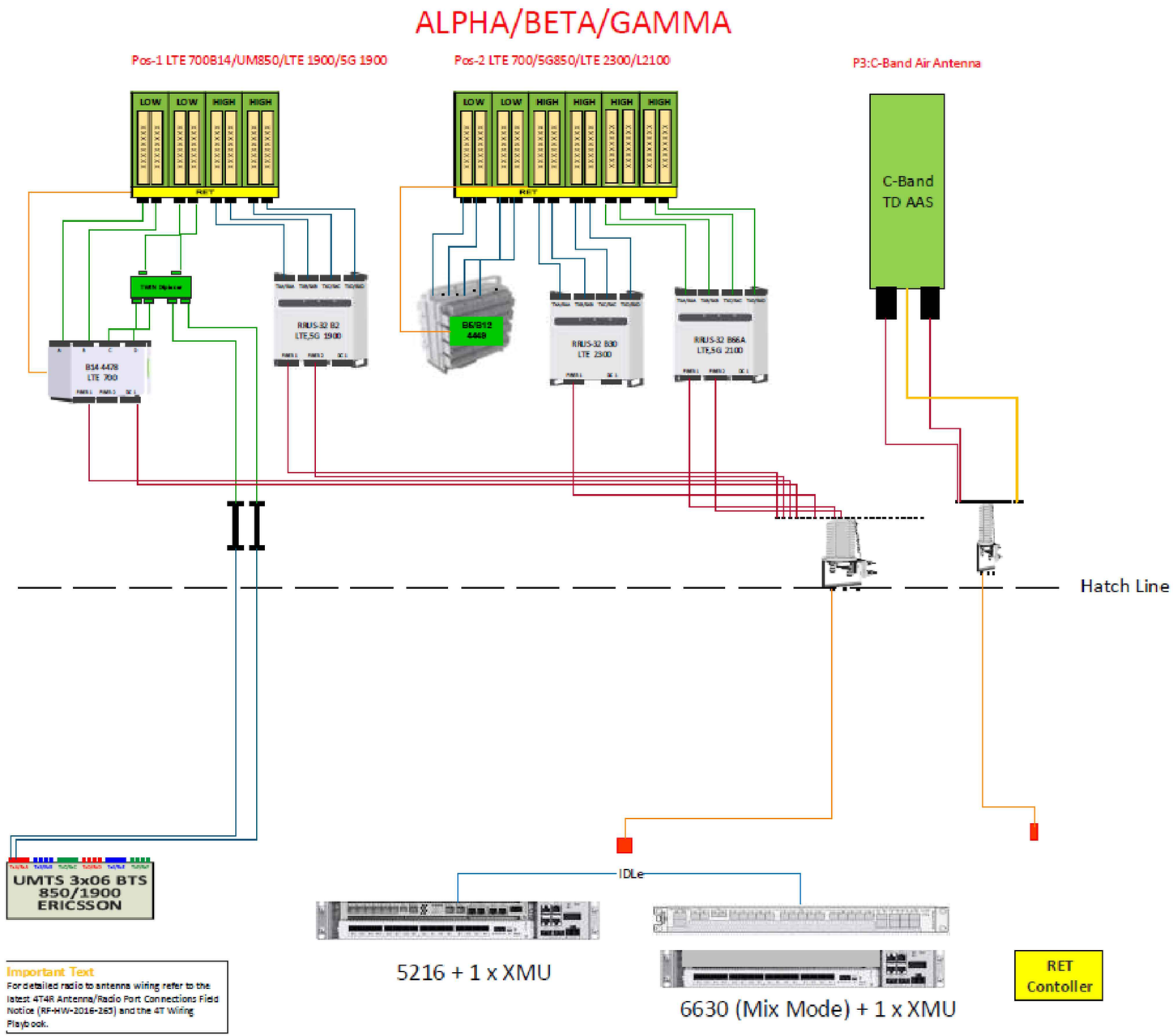

Important Text
For detailed radio to antenna wiring refer to the latest 4T4R Antenna/Radio Port Connections Field Notice (RF-HW-2016-263) and the 4T Wiring Playbook.

1 PLUMBING DIAGRAM
N.T.S.

PREPARED FOR

AT&T

5001 EXECUTIVE PKWY,
SAN RAMON CA 94583

Vendor:

J5 INFRASTRUCTURE PARTNERS

23 MAUCHLY, SUITE 110
IRVINE, CA 92618

P-055023

AT&T Site ID:

CCL05707

REV	DATE	DESCRIPTION	INT.
1	08/27/21	ADD GPD + EME	MM3
0	06/08/21	100% CD	ES/MM
A	05/05/21	90% CD	BH/MM

Licensor:

REGISTERED PROFESSIONAL ENGINEER
SEUNG KUN OH
C 84365
CIVIL
STATE OF CALIFORNIA

SIGNED: 08/27/2021
EXPIRES: 09/30/2023

It is a violation of law for any persons, unless they are acting under the direction of a licensed professional engineer, to alter this document

Issued For:

CCL05707

SHARON HEIGHTS

10 LAWLER RANCH ROAD
MENLO PARK, CA 94025

Sheet Title:

PLUMBING DIAGRAM

Sheet Number:

RF-1

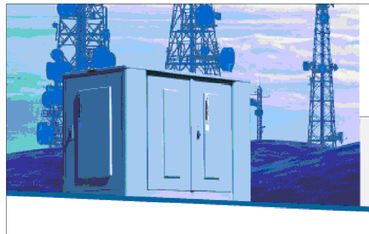

GS

PYL SERIES
LONG LIFE BATTERIES

BECAUSE WHEN THE POWER IS OUT, YOU DON'T WANT THEIR PHONES TO BE.

10 YEAR DESIGN LIFE
Exceeds TELCORDIA GR-1200 criteria
Greater than 5 years at 35ºC

CAPACITY RANGE
45Ah - 200Ah

HIGH TEMPERATURE LONG LIFE DESIGN
Primary lead for long life
Low calcium alloy for long life
Additives to maintain compression
Designed to control charging current as temperature increases
No thermal runaway
Epoxy sealed terminals to prevent post leaks
Rugged ABS cases to minimize handling damage

COMPLIANCE
VZ TPR-9802
GR-4228
GR-1089
GR-63 NEBS

SAFETY
UL 94V-0
UL 1989

ABOUT THE PYL SERIES

Proven in the real world, the PYL Series of telecom batteries provides security and long life in extreme climates where other VRLA batteries just don't survive. The PYL technology utilizes proprietary lead alloys and active material additives. The PYL Series is the most cost effective battery solution over the total life cycle and for initial installation in your network.

GS BATTERY FRONT TERMINAL SPECIFICATIONS

MODEL NUMBER	VOLTAGE	CAPACITY (Ah)		NOMINAL DIMENSIONS						NOMINAL WEIGHT	
		8HR TO 1.75V @ 25ºC	AMPERES/WATTS TO 1.75V @ 25ºC	INCHES			MILLIMETERS				
				A	B	C	A	B	C	LBS.	KG.
PYL12V160FT	12	160	62.6 / 739	21.9	4.9	11.0	556	125	280	116.2	52.7
PYL12V185FT	12	185	71.2 / 829	21.9	4.9	12.5	556	125	317	133.8	60.7

FLOAT VOLTAGE & CHARGING
CONSTANT VOLTAGE CHARGING IS RECOMMENDED.
RECOMMENDED FLOAT VOLTAGE: 1.75 VPC @ 25°C (77°F)

NOTE:
DESIGN AND/OR SPECIFICATIONS SUBJECT TO CHANGE WITHOUT NOTICE. IF QUESTIONS ARISE, CONTACT YOUR LOCAL GNB SALES REPRESENTATIVE FOR CLARIFICATION.

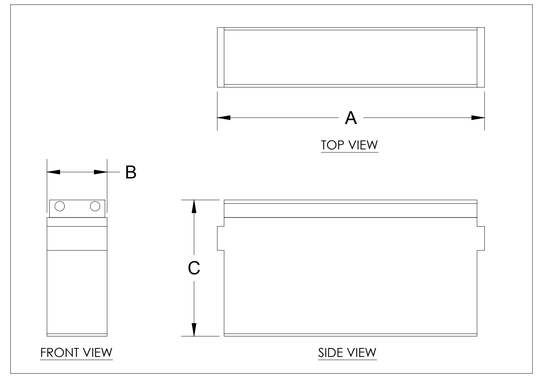

GS BATTERY FRONT TERMINAL SPECIFICATIONS

MODEL NUMBER	INTERNAL RESISTANCE (mOhms)
PYL12V160FT	2.5
PYL12V185FT	3.5

BATTERY INFORMATION (VRLA TYPE BATTERIES)

INSTALL STATUS	BATTERY MODEL	TOTAL # OF BATTERY UNITS INSTALLED (EA)	VOLTAGE (V)	AMP-HOURS (AH)	KWh, Kilowatt-hours = (V*AH)/1000	TOTAL BATTERY CAPACITY, KWh	STATIONARY BATTERY STORAGE SYSTEM THRESHOLD QUANTITY, PER CFC 2019 SECTION 1206	STATIONARY BATTERY STORAGE SYSTEM CODE CHECK	TOTAL ELECTROLYTE VOLUME (GALLONS) PER UNIT	TOTAL ELECTROLYTE BY VOLUME (GALLONS) =
EXISTING TO REMAIN	GNB INDUSTRIAL POWER MARATHON - M12V180FT	12	12	180	2.16	25.92			2.47	29.64
PROPOSED	GS PYL12V185FT	8	12	185	2.22	17.76			2.504	20.032
TOTAL		20				43.68	70	**CFC 2019 SECTION 1206 DOES NOT APPLY**		49.672

PREPARED FOR

AT&T

5001 EXECUTIVE PKWY,
SAN RAMON CA 94583

Vendor:

5 INFRASTRUCTURE PARTNERS

23 MAUCHLY, SUITE 110
IRVINE, CA 92618

P-055023

AT&T Site ID:

CCL05707

REV	DATE	DESCRIPTION	INT.
1	08/27/21	ADD GPD + EME	MM3
0	06/08/21	100% CD	ES/MM
A	05/05/21	90% CD	BH/MM

Licensor:

REGISTERED PROFESSIONAL ENGINEER
SEUNG KUN OH
C 84365
CIVIL
STATE OF CALIFORNIA

SIGNED: 08/27/2021
EXPIRES: 09/30/2023

It is a violation of law for any persons, unless they are acting under the direction of a licensed professional engineer, to alter this document

Issued For:

CCL05707

SHARON HEIGHTS

10 LAWLER RANCH ROAD
MENLO PARK, CA 94025

Sheet Title:
MATERIAL SAFETY DATA SHEET & LEAD ACID BATTERY

Sheet Number:
MSDS-1

NOTE:
1. RF SAFETY MEASURES COMPLETED PER EME REPORT COMPLETED ON 06/25/2021, BY "WATERFORD CONSULTANTS, LLC"
2. ANY OTHER RF REPORT IS FOR REFERENCE ONLY.

RECOMMENDATIONS:

AT&T ACCESS POINT(S):
CAUTION SIGN 2B (TOWER) AT BASE OF MONOPOLE (TO BE POSTED).

AT&T SECTOR A:
NO SIGNAGE OR BARRIER ACTION REQUIRED.

AT&T SECTOR B:
NO SIGNAGE OR BARRIER ACTION REQUIRED.

AT&T SECTOR C:
NO SIGNAGE OR BARRIER ACTION REQUIRED.

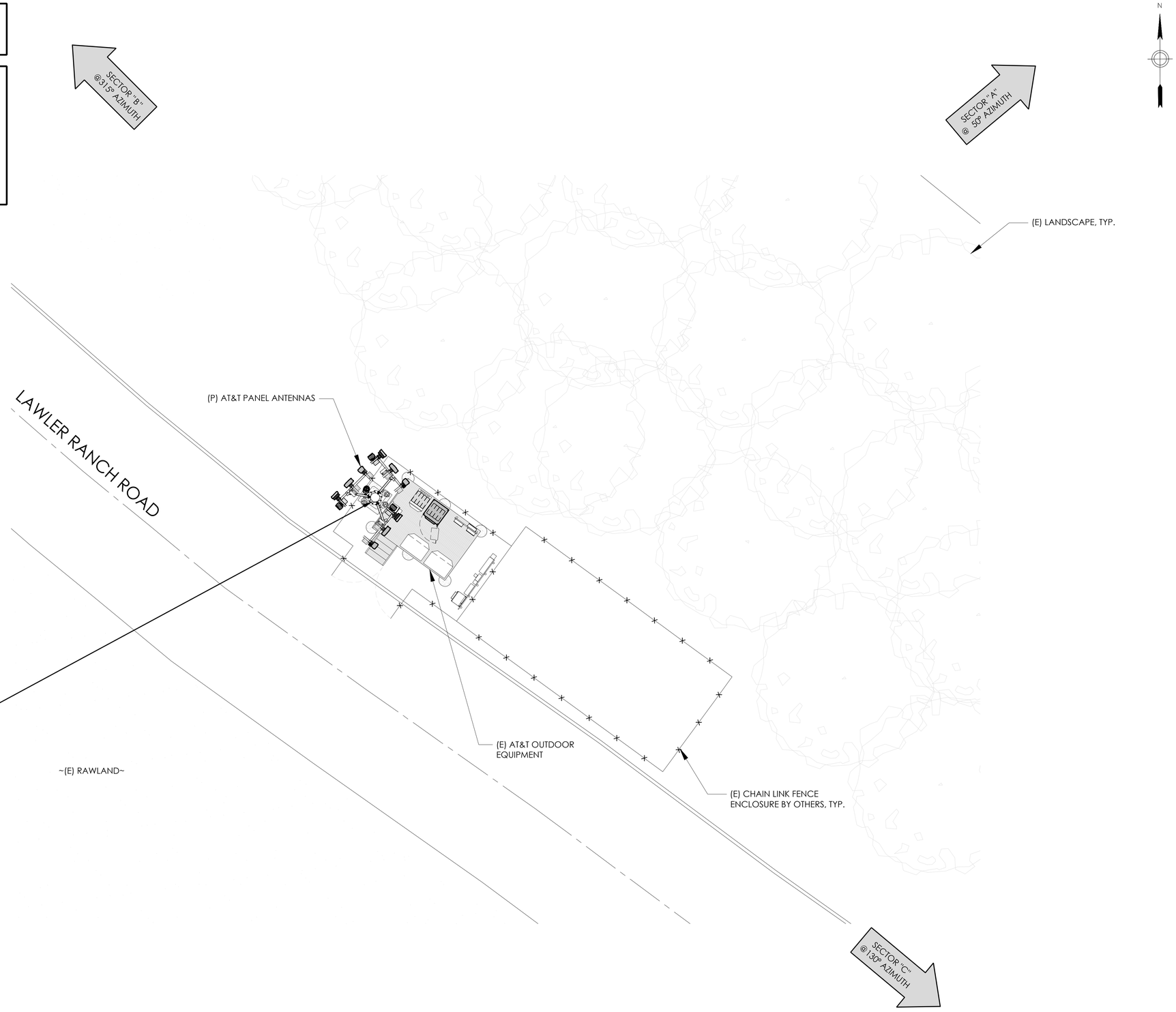

(P) CAUTION 2B SIGN

1 EME SIGNAGE LOCATION PLAN

24"x36" SCALE: NTS
11"x17" SCALE: NTS

PREPARED FOR

AT&T

5001 EXECUTIVE PKWY,
SAN RAMON CA 94583

Vendor:

J5 INFRASTRUCTURE PARTNERS

23 MAUCHLY, SUITE 110
IRVINE, CA 92618

P-055023

AT&T Site ID:

CCL05707

REV	DATE	DESCRIPTION	INT.
1	08/27/21	ADD GPD + EME	MM3
0	06/08/21	100% CD	ES/MM
A	05/05/21	90% CD	BH/MM

Licensor:

REGISTERED PROFESSIONAL ENGINEER
SEUNG KUN OH
C 84365
CIVIL
STATE OF CALIFORNIA

SIGNED: 08/27/2021
EXPIRES: 09/30/2023

It is a violation of law for any persons, unless they are acting under the direction of a licensed professional engineer, to alter this document

Issued For:

CCL05707

SHARON HEIGHTS

10 LAWLER RANCH ROAD
MENLO PARK, CA 94025

Sheet Title:

EME SIGNAGE LOCATION PLAN

Sheet Number:

EME-1

AT&T

This Site Operated by:

AT&T MOBILITY

5001 EXECUTIVE PKWY,
SAN RAMON, CA 94583
IN CASE OF FIRE AND THE NEED FOR SHUTDOWN
TO DEACTIVATE ANTENNAS CALL THE
FOLLOWING NUMBER:
For 24 Hour Emergency Contact and Access Please Call:
(800)832-6662

Reference Site#: CCL05707

Site Address: 10 LAWLER RANCH ROAD MENLO PARK, CA 94025

10 FENCED COMPOUND SIGNAGE
N.T.S.

DANGER

NO TRESPASSING

9 FENCED COMPOUND SIGNAGE
N.T.S.

INFORMATION

Federal Communications Communication
Tower Registration Number

1 2 3 4 5 6 7

Posted in accordance with federal Communications
Commission rules and antenna tower registration
47CFR 17.4(g).

8"

12"

6 FCC ASR SIGNAGE
N.T.S.

NOTICE

AUTHORIZED PERSONNEL ONLY

8 DOOR / EQUIPMENT SIGN
N.T.S.

Property of AT&T

Authorized Personnel Only

No Trespassing
Violators will be Prosecuted

In case of emergency, or prior to performing
maintenance on this site, call _____
and reference cell site number _____

5 GATE SIGNAGE
N.T.S.

0 3 2 W

DANGER

LEAD ACID BATTERIES

CORROSIVE LIQUIDS (ELECTROLYTE)
ENERGIZED ELECTRICAL CIRCUITS

NO SMOKING

7 NFPA HAZARD SIGN - TYPICAL
N.T.S.

Property of AT&T

Authorized Personnel Only

In case of emergency, or prior to performing
maintenance on this site, call _____
and reference cell site number _____

4 SHELTER / CABINET DOORS SIGNAGE
N.T.S.

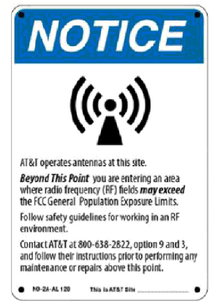

Notice Sign 2
(8" x 12")

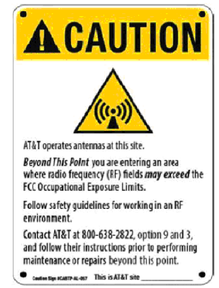

Caution Sign 2
(8" x 12")

Trilingual Notice Sign

Caution Sign 2A
(8" x 12")
Use only if instructed by RF Safety

Caution Sign 2B Tower
(8" x 12")
Use for Towers only

Caution Sign 2C Parapet
(5" x 7")

Warning Sign #WA-**1B**-AL-128

Warning Sign #WA-**2A**-AL-128

Note: Both signs have the same 8" x 12" dimensions

Shall be used when barriers are present or will be deployed around AT&T antennas – **Warning 1B**

Shall be used in lieu of barriers along with striping when barriers are not allowed– **Warning 2A**

REQUIRE HQ / MRFSE APPROVAL

1. CONTRACTOR SHALL INSTALL ALL INFORMATION SIGNAGE IN ACCORDANCE w/ AT&T WIRELESS DOCUMENT #03-0074, RF EXPOSURE POLICY AND RF SAFETY COMPLIANCE PROGRAM, LATEST EDITION.

2. FABRICATION:

*SIGN I-1: ENTRANCE DOOR, SEE DETAIL 1A, THIS SHEET

SIGN 1 IS TO BE MADE ON THE 50 MIL ALUMINUM SHEETING (SIZE 8 INCHES BY 12 INCHES) w/ FOUR (4) $\frac{1}{4}$ INCH MOUNTING HOLES, ONE EACH CORNER OF THE SIGN FOR MOUNTING w/ HARDWARE w/ TIE WRAPS. THE MAIN BACKGROUND COLOR IS TO BE WHITE FRONT & BACK w/ BLACK LETTERING.

THE INFORMATION BAND SHALL BE 1.2 INCH SOLID GREEN BAND w. 0.5 INCH HIGH BLACK LETTERING. THE BODY TEXT SHALL BE IN BLACK LETTERING w/0.2 INCH HIGH LETTERS. THE REF LINE SHALL BE IN $\frac{1}{8}$ INCH LETTERS.

THE PLACEMENT OF TEXT SHALL BE DONE IN A MANNER THAT WILL PERMIT EASY READING FROM A DISTANCE OF APPROXIMATELY 6 FEET IN FRONT OF THE SIGN.

ALL PAINT WILL BE BAKED w/ENAMEL w/ UV PROTECTIVE COATING OVER THE FACE OF THE SIGN.

*SIGN 1-2: POLE, SEE DETAIL 1B, THIS SHEET

SIGN 2 MUST BE A NON METALLIC LABEL w/ AN ADHESIVE BACKING. THE LABEL SHALL BE MADE USING VINYL OR SIMILAR WEATHERPROOF MATERIAL. THE LABEL SHALL BE APPROXIMATELY 5X7 INCHES w/ A WHITE BACKGROUND AND BLACK LETTERING. THE GREEN BAND SHALL BE 1.375 INCH IN HEIGHT & THE LETTERING SHALL BE BLACK w/ 0.75 INCH HIGH LETTERS. THE TEXT LETTERING SHALL BE BLACK w/ $\frac{1}{8}$ INCH HIGH LETTERS. UV PROTECTION SHALL BE PLACED OVER THE FRONT OF THE LABEL.

*SIGN 1-3: BACK OF ANTENNAS, SEE DETAIL 1C & 3, THIS SHEET

*SIGN 3 IS A 1 INCH X 2 INCH PANEL THAT CAN BE APPLIED TO THE BACK OR SIDE OF AN ANTENNA TO IDENTIFY IT AS AN AT&T ANTENNA.

*SIGN 1-4: SIDE OF ANTENNAS, SEE DETAIL 1D & 3, THIS SHEET

SIGN 4 IS MADE FROM TRANSPARENT MATERIAL 1-1/2 INCHES WIDE & 24 INCHES LONG. THE LETTERING IS TO BE BLACK w $\frac{1}{2}$ INCH LETTERING IN A VERTICAL COLUMN. THE SPACING BETWEEN WORDS MUST BE SUCH THAT IT IS EASILY READ & FILLS THE LENGTH OF THE SIGN.

2 ALERTING & INFORMATION SIGNAGE
N.T.S.

SIGNAGE AND STRIPING INFORMATION

1. THE FOLLOWING INFORMATION IS A GUIDELINE w/ RESPECT TO PREVAILING STANDARDS LIMITING HUMAN EXPOSURE TO RADIO FREQUENCY ENERGY AND SHOULD BE USED AS SUCH. IF THE SITE'S EMF REPORT OR ANY LOCAL, STATE OR FEDERAL GUIDELINES OR REGULATIONS SHOULD BE IN CONFLICT w/ ANY PART OF THESE NOTES OR PLANS, THE MORE RESTRICTIVE GUIDELINE OR REGULATION SHALL BE FOLLOWED AND OVERRIDE THE LESSER.
2. IF THE PUBLIC LIMIT OF RF EXPOSURE ON THE SITE IS EXCEEDED AND THE AREA IS PUBLICLY ACCESSIBLE (e.g. ROOF ACCESS DOOR THAT CANNOT BE LOCKED, OR FIRE EGRESS) THEN BOTH BARRICADES AND STRIPING SHALL BE PLACED AROUND THE ANTENNAS. THE EXACT EXTENT OF THE BARRICADES AND STRIPING SHALL BE DETERMINED BY THE EMF REPORT. USE THE PLANS AS A GUIDELINE FOR PLACEMENT OF SUCH BARRICADES AND STRIPING.
3. ALL TRANSMIT ANTENNAS REQUIRE A THREE LANGUAGE WARNING SIGN WRITTEN IN ENGLISH, SPANISH, AND CHINESE. THIS SIGN SHALL BE PROVIDED TO THE CONTRACTOR AND THE AT&T CONSTRUCTION PROJECT MANAGER AT THE TIME OF CONSTRUCTION. THE LARGER SIGN SHALL BE PLACED IN PLAIN SIGHT AT ALL ROOF ACCESS LOCATIONS AND ON ALL BARRICADES. THE SMALLER SIGN SHALL BE PLACED ON THE ANTENNA ENCLOSURES IN A MANNER THAT IS EASILY SEEN BY ANY PERSON ON THE ROOF. WARNING SIGNS SHALL COMPLY w/ ANSI C95.2 COLOR, SYMBOL, AND CONTENT CONVENTIONS. ALL SIGNS SHALL HAVE AT&T'S NAME AND THE COMPANY CONTACT INFORMATION (e.g. TELEPHONE NUMBER) TO ARRANGE FOR ACCESS TO THE RESTRICTED AREAS. THIS TELEPHONE NUMBER SHALL BE PROVIDED TO THE CONTRACTOR BY THE AT&T CONSTRUCTION PROJECT MANAGER AT THE TIME OF CONSTRUCTION.
4. PHOTOS OF ALL STRIPING, BARRICADES & SIGNAGE SHALL BE PART OF THE CONTRACTORS CLOSE OUT PACKAGE & SHALL BE TURNED INTO THE AT&T CONSTRUCTION PACKAGE & SHALL BE TURNED INTO THE AT&T CONSTRUCTION PROJECT MANAGER AT THE END OF CONSTRUCTION.
5. STRIPING SHALL BE DONE w/ FADE RESISTANT YELLOW SAFETY PAINT IN A CROSS-HATCH PATTERN AS DETAILED BY THE CONSTRUCTION DRAWINGS. ALL BARRICADES SHALL BE MADE OF AN RF FRIENDLY MATERIAL SO AS NOT TO BLOCK OR INTERFERE w/ THE OPERATION OF THE ANTENNAS. BARRICADES SHALL BE PAINTED w/ FADE RESTRAINT YELLOW SAFETY PAINT. THE CONTRACTOR SHALL PROVIDE ALL RF FRIENDLY BARRICADES NEEDED, & SHALL PROVIDE THE AT&T CONSTRUCTION PROJECT MANAGER w/ A DETAILED SHOP DRAWING OF EACH BARRICADE UPON CONSTRUCTION COMPLETION.

1 GENERAL NOTES
N.T.S.

PREPARED FOR

AT&T

5001 EXECUTIVE PKWY,
SAN RAMON CA 94583

Vendor:

INFRASTRUCTURE PARTNERS

23 MAUCHLY, SUITE 110
IRVINE, CA 92618

P-055023

AT&T Site ID:

CCL05707

REV	DATE	DESCRIPTION	INT.
1	08/27/21	ADD GPD + EME	MM3
0	06/08/21	100% CD	ES/MM
A	05/05/21	90% CD	BH/MM

Licensor:

REGISTERED PROFESSIONAL ENGINEER
SEUNG KUN OH
C 84365
CIVIL
STATE OF CALIFORNIA

SIGNED: 08/27/2021
EXPIRES: 09/30/2023

It is a violation of law for any persons, unless they are acting under the direction of a licensed professional engineer, to alter this document

Issued For:

CCL05707

SHARON HEIGHTS

10 LAWLER RANCH ROAD
MENLO PARK, CA 94025

Sheet Title:

SITE SIGNAGE

Sheet Number:

SS-1

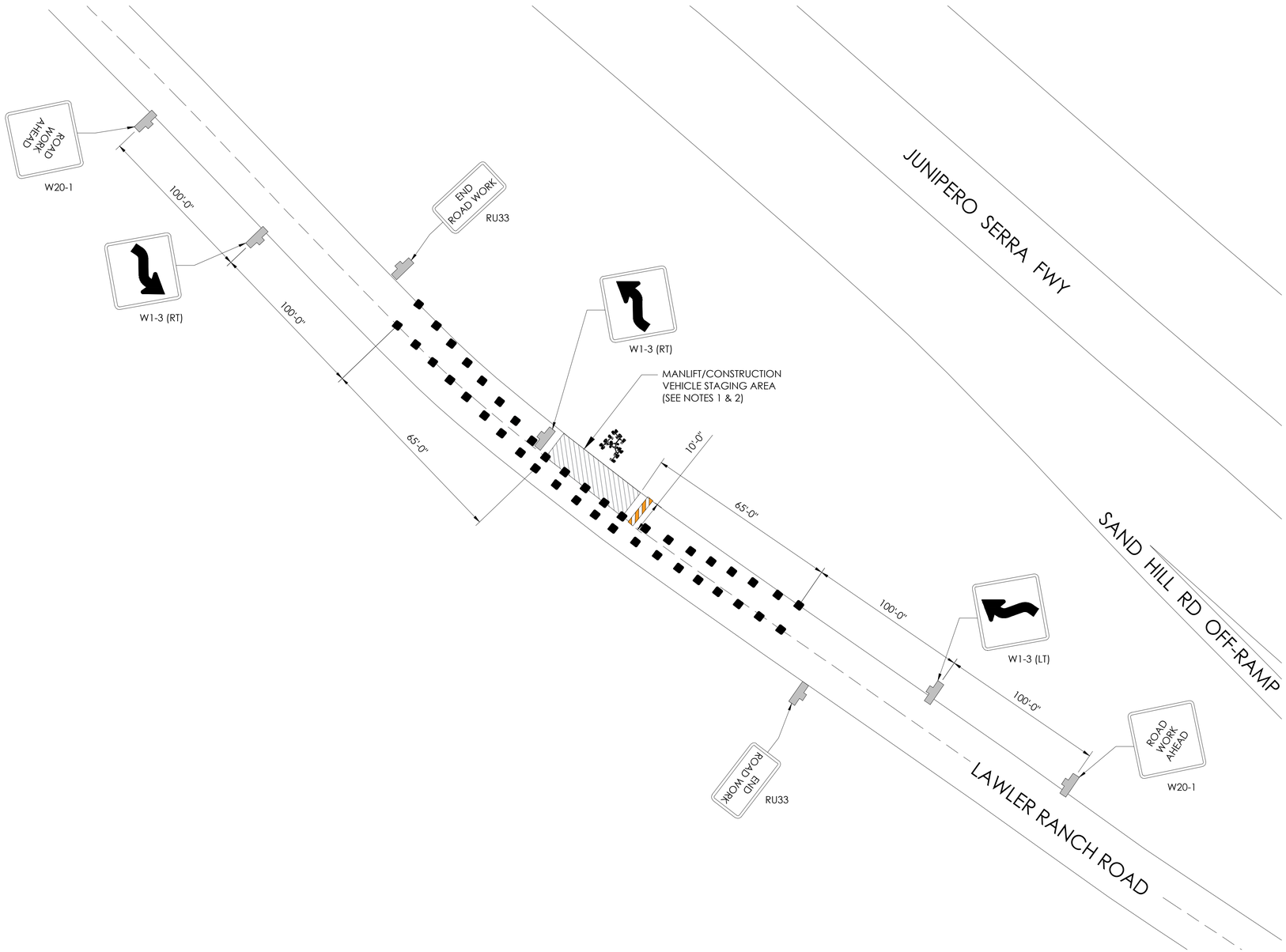

GENERAL NOTES:

1. ALL WORK AND MATERIALS SHALL COMPLY WITH THE CALIFORNIA MANUAL ON UNIFORM TRAFFIC CONTROL DEVICES (MUTCD), 2014 EDITION.
2. ALL STRIPING AND MARKINGS SHALL CONFORM TO THE STATE OF CALIFORNIA 2010 STANDARD PLAN A20A.
3. THE CONTRACTOR SHALL PROVIDE FOR ACCESS TO ALL ADJACENT PROPERTIES.
4. FLASHING YELLOW BEACONS, TYPE "B", SHALL BE USED ON ALL W20-1 SIGNS AND ON ALL TYPE III BARRICADES GUARDING THE WORK OVERNIGHT.
5. ALL SIGNS SHALL BE REFLECTORIZED AND STANDARD SIZE.
6. ALL TUBULAR DELINEATORS AND CONES SHALL BE 28" MINIMUM HEIGHT, REFLECTORIZED AND MAINTAINED ERECT IN THE INDICATED POSITION AT ALL TIMES, AND SHALL BE REPAIRED, REPLACED, OR CLEANED AS NECESSARY TO PRESERVE THEIR APPEARANCE AND CONTINUITY, AND SHALL INCLUDE A 12" HIGH-INTENSITY REFLECTORIZED SLEEVE..
7. THE CONTRACTOR SHALL MAINTAIN, ON A CONTINUOUS BASIS, ALL SIGNS, DELINEATORS, BARRICADES, ETC., TO ENSURE PROPER FLOW AND SAFETY OF TRAFFIC DURING CONSTRUCTION.
8. THE CONTRACTOR SHALL HAVE SIGNS, DELINEATORS, BARRICADES, ETC., PROPERLY INSTALLED PRIOR TO COMMENCING CONSTRUCTION.
9. CONSTRUCTION OPERATIONS SHALL BE CONDUCTED IN SUCH A MANNER AS TO CAUSE AS LITTLE INCONVENIENCE AS POSSIBLE TO ABUTTING PROPERTY OWNERS.
10. ADDITIONAL TRAFFIC CONTROLS, TRAFFIC SIGNS OR BARRICADING MAY BE REQUIRED IN THE FIELD. THE CONTRACTOR SHALL BE RESPONSIBLE FOR THE PLACEMENT OF ANY ADDITIONAL DEVICES NECESSARY TO ASSURE THE SAFETY TO THE PUBLIC AT ALL TIMES DURING CONSTRUCTION.
11. EXACT LOCATION AND TYPE OF CONSTRUCTION SIGNS SHALL BE DIRECTED BY THE ENGINEER BASED UPON CONSTRUCTION CONDITIONS.
12. MOVE DELINEATORS AND/OR CONES TO SIDEWALK DURING NON-WORKING HOURS. REMOVE BARRICADES ETC., FROM TRAVEL LANE.
13. REMOVE OR TURN OFF SIGNS DURING NON-WORKING HOURS.
14. ALL CONFLICTING LINES, EXISTING CURB PAINT, AND MARKINGS SHALL BE REMOVED BY WET SANDBLASTING OR OTHER APPROVED METHOD PRIOR TO INSTALLATION OF NEW/TEMPORARY STRIPING. ALL CONFLICTING RAISED PAVEMENT MARKERS SHALL BE REMOVED. PAVEMENT THAT IS DAMAGED DUE TO REMOVAL OF MARKERS SHALL BE REPAIRED TO THE SATISFACTION OF THE CITY ENGINEER AND/OR STATE INSPECTOR.
15. DIMENSIONS BASED ON RECORD DRAWINGS AND NOT A SURVEY.
16. TIME OF LANE CLOSURE TO BE IN ACCORDANCE WITH REQUIREMENTS OF JURISDICTION.
17. ADDITIONAL ADVANCED FLAGGERS MAY BE REQUIRED. FLAGGER SHOULD STAND IN A CONSPICUOUS PLACE, BE VISIBLE TO APPROACHING TRAFFIC. PLACE A MINIMUM OF FOUR CONES AT 40-FT INTERVAL IN ADVANCE OF FLAGGER STATION AS SHOWN.

NOTES:

1. A MANLIFT WILL BE STAGED IN THE R.O.W. AND WILL BE USED TO REMOVE DECOMMISSIONED EQUIPMENT FROM THE EXISTING AT&T SITE AND TO PLACE NEW EQUIPMENT AT THE NEW AT&T SITE.
2. THE MANLIFT WILL EXTEND FROM STAGING AREAS IN THE R.O.W. TO THE SITE LOCATIONS.

MINIMUM RECOMMENDED CHANNELIZING DEVICE AND SIGN SPACING

SPEED "S" MPH	DIMENSION A SIGN SPACING	DIMENSION L/2 SHIFTING TAPER LENGTH	DIMENSION E BUFFER SPACE	MAXIMUM CHANNELIZER SPACING TAPER	MAXIMUM CHANNELIZER SPACING TANGENT
25	100 FT.	65 FT.	155 FT.	25 FT.	50 FT.

1 TRAFFIC CONTROL PLAN

24"x36" SCALE: NTS
11"x17" SCALE: NTS

PREPARED FOR

AT&T

5001 EXECUTIVE PKWY,
SAN RAMON CA 94583

Vendor:

J5 INFRASTRUCTURE PARTNERS

23 MAUCHLY, SUITE 110
IRVINE, CA 92618

P-055023

AT&T Site ID:

CCL05707

REV	DATE	DESCRIPTION	INT.
1	08/27/21	ADD GPD + EME	MM3
0	06/08/21	100% CD	ES/MM
A	05/05/21	90% CD	BH/MM

Licensor:

REGISTERED PROFESSIONAL ENGINEER SEUNG KUN OH C 84365 CIVIL STATE OF CALIFORNIA

SIGNED: 08/27/2021
EXPIRES: 09/30/2023

It is a violation of law for any persons, unless they are acting under the direction of a licensed professional engineer, to alter this document

Issued For:

CCL05707

SHARON HEIGHTS

10 LAWLER RANCH ROAD
MENLO PARK, CA 94025

Sheet Title:

TRAFFIC CONTROL PLAN

Sheet Number:

TCP-1

SHARON HEIGHTS

FA #: 10134379

CLIENT #: CCL05707

USID #: 113035

TOWER INFORMATION:

TOWER DESIGN:	WSC/PROJ. #: 11-0062
TOWER HEIGHT/TYPE:	21'-2" MONOPOLE
TOWER LOCATION:	
LAT.:	37° 25' 20.04"
LONG.:	-122° 13' 36.98"
STREET ADDRESS:	10 LAWLER RANCH ROAD
CITY, STATE ZIP:	MENLO PARK, CA 94025
COUNTY:	SAN MATEO
REFERENCED ANALYSIS:	GPD/PROJ #: 2021723.15.113035.02
ANALYSIS DATE:	07/01/2021

CODE COMPLIANCE:

GOVERNING CODES:	TIA-222-H & 2019 CBC
WIND SPEEDS:	92 MPH 3 SECOND GUST
ICE THICKNESS:	NA
RISK CATEGORY:	II
EXPOSURE CATEGORY:	C
TOPO CATEGORY:	1

SEISMIC CRITERIA:

SITE CLASS:	D
RESPONSE COEFFICIENT (R):	1.5
1-SECOND SPECTRAL RESPONSE ACCELERATION (S_1) :	0.921
SHORT PERIOD SPECTRAL RESPONSE ACCELERATION (S_S):	2.341

PROJECT CONTACTS:

CLIENT CONTACT:

JOE FITZSIMONS
2030 MAIN STREET, SUITE 200
IRVINE, CA 92614
(678) 917-0899

ENGINEER CONTACT:

GPD GROUP, INC.
520 SOUTH MAIN STREET, SUITE 2531
AKRON, OH 44311
(330) 572-2100
FOR QUESTIONS PLEASE EMAIL:
GPDMODS@GPDGROUP.COM

QUALIFIED ENGINEERING SERVICES ARE AVAILABLE FROM GPD TO ASSIST CONTRACTORS IN CLASS IV RIGGING PLAN REVIEWS. FOR REQUESTING QUALIFIED ENGINEERING SERVICES PLEASE CONTACT GPD AT GPDMODS@GPDGROUP.COM.

SHEET INDEX:

REGISTERED PROFESSIONAL ENGINEER
JOHN N. KABAK
6057
STRUCTURAL
STATE OF CALIFORNIA
8/13/21

GPD GROUP, INC.
520 South Main Street, Suite 2531
Akron, OH 44311
330.572.2100 Fax 330.572.2102

SHARON HEIGHTS
USID #: 113035

DESIGN DRAWINGS PREPARED FOR:

CLIENT #: CCL05707

REV	DATE	DESCRIPTION
0	8/13/21	INITIAL RELEASE

SHARON HEIGHTS
10 LAWLER RANCH ROAD
MENLO PARK, CA 94025

TITLE SHEET

ISSUED FOR:	
PERMIT	8/13/2021
BID	-
CONSTRUCTION	-
RECORD	-

ENGINEER	DESIGNER
MM	JMJ
PROJECT MANAGER	APPROVED BY
DP	JNK

JOB NO.
2021723.15.113035.03

T-01

MODIFICATION INSPECTION CHECKLIST

REQUIRED	REPORT ITEM	BRIEF DESCRIPTION
PRE-CONSTRUCTION		
X	MI CHECKLIST DRAWING	THIS CHECKLIST SERVES AS A GUIDELINE FOR THE REQUIRED CONSTRUCTION DOCUMENTS AND INSPECTIONS FOR THIS MODIFICATION
X	EOR APPROVED SHOP DRAWINGS	PRIOR TO FABRICATION, THE CONTRACTOR SHALL PROVIDE DETAILED ASSEMBLY DRAWINGS AND/OR SHOP DRAWINGS TO THE EOR FOR APPROVAL.
X	FABRICATION INSPECTION	A LETTER FROM THE FABRICATOR STATING THAT ALL FABRICATION (I.E. DRILLING, CUTTING, WELDING, SHEARING, MILLING, GALVANIZING, ETC) HAS BEEN DONE ACCORDING TO INDUSTRY STANDARDS AND ALL APPLICABLE ANSI/ASTM STANDARDS.
X	FABRICATOR CERTIFIED WELD INSPECTION	A CWI SHALL INSPECT ALL FABRICATION WELDS IN ACCORDANCE WITH AWS D1.1 AND A REPORT DETAILING THE RESULTS SHALL BE PROVIDED TO THE MI INSPECTOR FOR INCLUSION IN THE MI REPORT.
X	MATERIAL TEST REPORTS (MTR)	MATERIAL TEST REPORTS SHALL BE PROVIDED FOR ALL MATERIAL USED. MTR'S SHALL BE PROVIDED TO THE MI INSPECTOR FOR INCLUSION IN THE MI REPORT.
NA	FABRICATOR NDE INSPECTION REPORT	CRITICAL SHOP WELDS THAT REQUIRE ADDITIONAL TESTING ARE NOTED WITHIN THE MODIFICATION DRAWINGS. A CERTIFIED NDT INSPECTOR SHALL PERFORM NON-DESTRUCTIVE EXAMINATION ON ALL PJP, CJP, AND FILLET WELDS >5/16" IN ACCORDANCE WITH AWS D1.1 AND A REPORT DETAILING THE RESULTS SHALL BE PROVIDED TO THE MI INSPECTOR FOR INCLUSION IN THE MI REPORT.
X	NDE OF MONOPOLE BASE PLATE	A NDE OF THE POLE TO BASE PLATE CONNECTION IS REQUIRED AND A WRITTEN REPORT SHALL BE PROVIDED TO THE MI INSPECTOR FOR INCLUSION IN THE MI REPORT.
X	PACKING SLIPS	PACKING/SHIPPING LIST FOR ALL MATERIAL USED DURING CONSTRUCTION OF THE MODIFICATION SHALL BE PROVIDED.
DURING CONSTRUCTION		
NA	PRE-POUR REBAR INSPECTIONS	A 3RD PARTY VISUAL OBSERVATION OF THE EXCAVATION AND REBAR SHALL BE PERFORMED **BEFORE** PLACING THE CONCRETE. A WRITTEN REPORT SHALL BE PROVIDED TO THE MI INSPECTOR FOR INCLUSION IN THE MI REPORT.
NA	POST-INSTALLED REBAR AND/OR DOWEL INSPECTIONS	PHOTOGRAPHIC DOCUMENTATION OF DRILL HOLE SIZES AND DEPTHS SHALL BE RECORDED **BEFORE** SETTING THE POST INSTALLED REBAR AND DOWELS WITH EPOXY/GROUT.
NA	CONCRETE COMP. STRENGTH & SLUMP TEST	THE CONCRETE MIX DESIGN, SLUMP TEST, AND COMPRESSIVE STRENGTH TESTS SHALL BE PROVIDED AS PART OF THE MI REPORT.
NA	EARTHWORK: LIFT & DENSITY REPORT	REPORT DETAILING SOIL COMPACTION TEST RESULTS TO BE INCLUDED IN THE MI REPORT.
NA	MICROPILE/ROCK ANCHOR	MICROPILES AND ROCK ANCHORS SHALL BE INSPECTED BY A 3RD PARTY. INSPECTION SHALL VERIFY ANCHOR SIZE, STEEL GRADE, AND HOLE DEPTHS. PHOTOGRAPHIC DOCUMENTATION OF ALL MEASUREMENTS ALONG WITH THE PULL TEST RESULTS SHALL BE INCLUDED IN THE MI REPORT.
NA	HELICAL ANCHOR	HELICAL INSTALLER SHALL SUBMIT FINAL SEALED HELICALS DESIGN, TORQUE LOGS, AND FINAL LOAD TEST RESULTS TO BE INCLUDED IN THE MODIFICATION INSPECTION REPORT.
X	POST-INSTALLED ANCHOR ROD VERIFICATION	POST INSTALLED ANCHOR ROD VERIFICATION SHALL BE PERFORMED AND SHALL INCLUDE PHOTO VERIFICATION OF HOLE DEPTH, HOLE CLEANOUT AND ROUGHENING, AND EPOXY LABELING. REPORT SHALL BE PROVIDED TO THE MI INSPECTOR FOR INCLUSION IN THE MI REPORT.
X	3RD PARTY FIELD CERTIFIED WELD INSPECTION	A CWI SHALL CONDUCT A VISUAL INSPECTION OF ALL FIELD WELDS IN ACCORDANCE WITH AWS D1.1. CRITICAL WELDS THAT REQUIRE ADDITIONAL TESTING ARE NOTED IN THE MODIFICATION DRAWINGS.
X	ON-SITE COLD GALVANIZING VERIFICATION	THE GENERAL CONTRACTOR SHALL PROVIDE WRITTEN AND PHOTOGRAPHIC DOCUMENTATION TO THE MI INSPECTOR VERIFYING THAT ANY ON-SITE COLD GALVANIZING WAS APPLIED PER MANUFACTURER SPECIFICATIONS.
NA	TENSION TWIST & PLUMB DELIVERABLES	THE GENERAL CONTRACTOR SHALL PROVIDE WRITTEN AND PHOTOGRAPHIC DOCUMENTATION TO THE MI INSPECTOR VERIFYING THE TOWER TWIST AND PLUMB CONDITION AS WELL AS THE WIRE TENSIONS (AS REQUIRED). REPORT SHALL INCLUDE PRE-TENSION, PLUMB & TWIST RESULTS, POST-TENSION REPORT, POST PLUMB AND TWIST REPORT, AND PHOTOS OF THE TENSION GAUGES FOR ALL GUY WIRES.
X	GC AS-BUILT DRAWINGS	THE GENERAL CONTRACTOR SHALL SUBMIT A LEGIBLE COPY OF THE ORIGINAL DESIGN DRAWINGS EITHER STATING "INSTALLED AS DESIGNED" OR NOTING ANY CHANGES THAT WERE REQUIRED AND APPROVED BY THE ENGINEER OF RECORD. EOR/RFI FORMS APPROVING ALL CHANGES SHALL BE SUBMITTED.
NA	BOLT PRE-TENSION VERIFICATION	TURN-OF-THE NUT METHOD IS THE DEFAULT METHOD FOR PRE-TENSIONING BOLTS. MATCH-MARKINGS SHALL BE PRESENT ON EACH FASTENER FOR INSPECTION PURPOSES AND SHALL BE APPLIED IN ACCORDANCE WITH THE REQUIREMENTS OF THE RCSC SPECIFICATION. ALTERNATIVE PRE-TENSIONING METHODS ARE NOT ALLOWED WITHOUT PRIOR EOR CONSENT.
POST-CONSTRUCTION		
X	CONSTRUCTION COMPLIANCE LETTER	A LETTER FROM THE GENERAL CONTRACTOR STATING THAT THE WORKMANSHIP WAS PERFORMED IN ACCORDANCE WITH INDUSTRY STANDARDS AND THESE MODIFICATION DRAWINGS, INCLUDING LISTING ADDITIONAL PARTIES TO THE MODIFICATION PROCESS.
X	POST-INSTALLED ANCHOR ROD PULL TESTS	POST-INSTALLED ANCHOR RODS SHALL BE TESTED BY A PULL TEST INSPECTOR AND A REPORT SHALL BE PROVIDED INDICATING TESTING RESULTS.
X	PHOTOGRAPHS	PHOTOGRAPHS SHALL BE SUBMITTED TO THE MI INSPECTOR. PHOTOS SHALL DOCUMENT ALL PHASES OF THE CONSTRUCTION. THE PHOTOS SHALL BE ORGANIZED IN A MANNER THAT EASILY IDENTIFIES THE EXACT LOCATION OF THE PHOTO.
NA	FOUNDATION SEALER	PHOTOGRAPHIC DOCUMENTATION OF THE FOUNDATION SEALING SHALL BE INCLUDED IN THE MI REPORT.
NA	BOLT HOLE INSTALLATION VERIFICATION REPORT	THE MI INSPECTOR SHALL VERIFY THE INSTALLATION AND TIGHTNESS OF 10% OF ALL NON PRE-TENSIONED BOLTS INSTALLED AS PART OF THE MODIFICATION. THE MI INSPECTOR SHALL LOOSEN THE NUT AND VERIFY THE BOLT HOLE SIZE AND CONDITION. THE MI REPORT SHALL CONTAIN THE COMPLETED BOLT INSTALLATION VERIFICATION REPORT, INCLUDING THE SUPPORTING PHOTOGRAPHS.
X	MI INSPECTOR REDLINE OR RECORD DRAWING(S)	THE MI INSPECTOR SHALL OBSERVE AND REPORT ANY DISCREPANCIES BETWEEN THE CONTRACTOR'S REDLINE DRAWING AND THE ACTUAL COMPLETED INSTALLATION.

*THE MI CHECKLIST SHALL BE REVIEWED PRIOR TO THE START OF CONSTRUCTION. ALL PARTIES TO THE MODIFICATION SHALL UNDERSTAND ALL REQUIREMENTS AND INSPECTION/DOCUMENTATION THAT IS APPLICABLE TO THE SCOPE OF WORK THEY ARE PERFORMING. ERRORS ON THE MI CHECKLIST SHALL BE BROUGHT TO THE ATTENTION OF THE TOWER/STRUCTURE OWNER AND EOR AS SOON AS POSSIBLE.

MODIFICATION INSPECTION NOTES

GENERAL

1. THE MI IS AN ON-SITE VISUAL AND HANDS-ON INSPECTION OF TOWER MODIFICATIONS INCLUDING A REVIEW OF CONSTRUCTION REPORTS AND ADDITIONAL PERTINENT DOCUMENTATION PROVIDED BY THE GENERAL CONTRACTOR (GC), AS WELL AS ANY INSPECTION DOCUMENTS PROVIDED BY 3RD PARTY INSPECTORS. THE MI IS TO ENSURE THE INSTALLATION WAS CONSTRUCTED IN ACCORDANCE WITH THE MODIFICATION DRAWINGS; IN ACCORDANCE WITH APPLICABLE INDUSTRY STANDARDS; AND AS DESIGNED BY THE ENGINEER OF RECORD (EOR).
2. NO DOCUMENT, CODE OR POLICY CAN ANTICIPATE EVERY SITUATION THAT MAY ARISE. ACCORDINGLY, THIS CHECKLIST IS INTENDED TO SERVE AS A SOURCE OF GUIDING PRINCIPLES IN ESTABLISHING GUIDELINES FOR MODIFICATION INSPECTION.
3. THE MI IS TO CONFIRM INSTALLATION CONFIGURATION AND WORKMANSHIP ONLY AND IS NOT A REVIEW OF THE MODIFICATION DESIGN ITSELF, AND THE MI INSPECTOR DOES NOT TAKE OWNERSHIP OF THE MODIFICATION DESIGN. THE MI INSPECTOR SHALL INSPECT AND NOTE CONFORMANCE/NONCONFORMANCE AND PROVIDE TO THE TOWER/STRUCTURE OWNER AND EOR FOR EVALUATION.
4. TO ENSURE THAT THE REQUIREMENTS OF THE MODIFICATION INSPECTION ARE MET, IT IS VITAL THAT THE GENERAL CONTRACTOR (GC) AND THE MI INSPECTOR BEGIN COMMUNICATING AND COORDINATING AS SOON AS A PO OR PAYMENT IS RECEIVED. IT IS EXPECTED THAT EACH PARTY WILL BE PROACTIVE IN REACHING OUT TO THE OTHER PARTY. CONTACT LISTED ON THE TITLE SHEET SHALL BE CONTACTED IF SPECIFIC INSPECTOR CONTACT INFORMATION IS NOT KNOWN.

FAILING INSPECTION CORRECTIONS

1. IF THE MODIFICATION INSTALLATION WOULD FAIL THE MODIFICATION INSPECTION ("FAILED MODIFICATION INSPECTION"), THE GC SHALL WORK WITH MI INSPECTOR TO COORDINATE A REMEDIATION PLAN IN ONE OF TWO WAYS:
   - CORRECT FAILING ISSUES TO COMPLY WITH THE SPECIFICATIONS CONTAINED IN THE ORIGINAL MODIFICATION DRAWINGS AND COORDINATE A SUPPLEMENT MODIFICATION INSPECTION.
   - OR, WITH TOWER OWNER'S APPROVAL, THE GC MAY WORK WITH THE ENGINEER OF RECORD TO RE-ANALYZE THE MODIFICATION/REINFORCEMENT USING THE AS-BUILT CONDITION.

SERVICE LEVEL COMMITMENT

1. THE FOLLOWING RECOMMENDATIONS AND SUGGESTIONS ARE OFFERED TO ENHANCE THE EFFICIENCY AND EFFECTIVENESS OF DELIVERING AN MI REPORT:
   - THE GC SHALL PROVIDE A MINIMUM OF 5 BUSINESS DAYS NOTICE, PREFERABLY 10, TO THE MI INSPECTOR AS TO WHEN THE SITE WILL BE READY FOR THE MI TO BE CONDUCTED.
   - THE GC AND MI INSPECTOR COORDINATE CLOSELY THROUGHOUT THE ENTIRE PROJECT.
   - WHEN POSSIBLE, IT IS PREFERRED TO HAVE THE GC AND MI INSPECTOR ON-SITE SIMULTANEOUSLY FOR ANY GUY WIRE TENSIONING OR RE-TENSIONING OPERATIONS.
   - WHEN POSSIBLE, IT IS PREFERRED TO HAVE THE GC AND MI INSPECTOR ON-SITE DURING THE MI TO HAVE ANY MINOR DEFICIENCIES CORRECTED DURING THE INITIAL MI. THEREFORE, THE GC MAY CHOOSE TO COORDINATE THE MI CAREFULLY TO ENSURE ALL CONSTRUCTION FACILITIES ARE AT THEIR DISPOSAL WHEN THE MI INSPECTOR IS ON SITE.
   - IT MAY BE BENEFICIAL TO INSTALL ALL TOWER MODIFICATIONS PRIOR TO CONDUCTING THE FOUNDATION INSPECTIONS TO ALLOW THE FOUNDATION AND MODIFICATION INSPECTION(S) TO COMMENCE WITH ONE SITE VISIT.

REQUIRED PHOTOS

1. BETWEEN THE GC AND THE MI INSPECTOR THE FOLLOWING PHOTOGRAPHS, AT A MINIMUM, ARE TO BE TAKEN AND INCLUDED IN THE MI REPORT:
   - PRE-CONSTRUCTION GENERAL SITE CONDITION
   - PHOTOGRAPHS DURING THE REINFORCEMENT MODIFICATION CONSTRUCTION/ERECTION AND INSPECTION
     - RAW MATERIALS
     - PHOTOS OF ALL CRITICAL DETAILS
     - FOUNDATION MODIFICATIONS
     - WELD PREPARATION
     - BOLT INSTALLATION
     - FINAL INSTALLED CONDITION
     - SURFACE COATING REPAIR
   - POST CONSTRUCTION PHOTOGRAPHS
     - FINAL INFIELD CONDITION
   - ANY OTHER PHOTOS DEEMED RELEVANT TO SHOW COMPLETE DETAILS OF THE MODIFICATIONS.
2. PHOTOS OF ELEVATED MODIFICATIONS TAKEN ONLY FROM THE GROUND SHALL BE CONSIDERED INADEQUATE.

REGISTERED PROFESSIONAL ENGINEER
JOHN N. KABAK
6057
STRUCTURAL
STATE OF CALIFORNIA
8/13/21

GPD GROUP, INC.®
520 South Main Street, Suite 2531
Akron, OH 44311
330.572.2100 Fax 330.572.2102

at&t
SHARON HEIGHTS
USID #: 113035

DESIGN DRAWINGS PREPARED FOR:
INFRASTRUCTURE PARTNERS
CLIENT #: CCL05707

REV	DATE	DESCRIPTION
0	8/13/21	INITIAL RELEASE

SHARON HEIGHTS
10 LAWLER RANCH ROAD
MENLO PARK, CA 94025

MODIFICATION INSPECTION CHECKLIST

ISSUED FOR:	
PERMIT	8/13/2021
BID	-
CONSTRUCTION	-
RECORD	-

ENGINEER	DESIGNER
MM	JMJ
PROJECT MANAGER	APPROVED BY
DP	JNK

JOB NO.
2021723.15.113035.03

MI-01

GENERAL NOTES

1. THIS DESIGN IS IN ACCORDANCE WITH THE GOVERNING PROVISIONS OF TIA/EIA-222, AWS, ANSI TIA-322, AND AISC. MATERIALS, FABRICATION, INSTALLATION, AND ALL OTHER SERVICES PROVIDED BY THE CONTRACTOR SHALL CONFORM TO THE ABOVE MENTIONED CODES AND THE CONTRACT SPECIFICATIONS.

2. THIS DESIGN ASSUMES THE TOWER AND FOUNDATIONS HAVE BEEN WELL MAINTAINED, ARE IN GOOD CONDITION, AND ARE WITHOUT DEFECT. BENT MEMBERS, CORRODED MEMBERS, LOOSE BOLTS, CRACKED WELDS AND OTHER MEMBER DEFECTS HAVE NOT BEEN CONSIDERED. THE TOWER IS ASSUMED TO BE PLUMB AND THE SITE IS ASSUMED TO BE LEVEL. THIS DESIGN IS BEING PROVIDED WITHOUT THE BENEFIT OF A CONDITION ASSESSMENT BY GPD.

3. THE CONTRACTOR SHALL VISIT THE SITE PRIOR TO BIDDING; ANY PROBLEMS WITH ACCESS, INTERFERENCE, ETC. SHALL BE RESOLVED PRIOR TO MOBILIZATION. CONTRACTOR SHALL FIELD VERIFY ALL DIMENSIONS AND NOTE ANY EXISTING CONDITIONS THAT ARE NOT REPRESENTED ON THESE DRAWINGS OR THAT INTERFERE WITH THE CONTINUOUS INSTALLATION OF THE MODIFICATIONS. CONTRACTOR SHALL NOTE ALL ATTACHMENT POINTS, ANTENNAS, MOUNTS, COAX, LIGHTING, CLIMBING SUPPORTS, STEP BOLTS, PORT HOLES, AND ANY OTHER APPURTENANCES IN THE REGION OF THE MODIFICATIONS. GPD SHALL BE CONTACTED IMMEDIATELY TO EVALUATE THE SIGNIFICANCE OF ANY DEVIATION PRIOR TO ORDERING MATERIAL.

4. ALL MATERIAL SPECIFIED FOR THIS PROJECT MUST BE NEW AND FREE OF ANY DEFECTS. ANY MATERIAL SUBSTITUTIONS, INCLUDING BUT NOT LIMITED TO ALTERED SIZES AND/OR STRENGTHS, MUST BE APPROVED BY THE OWNER AND ENGINEER IN WRITING. CONTRACTOR SHALL PROVIDE DOCUMENTATION TO ENGINEER FOR DETERMINING IF SUBSTITUTE IS SUITABLE FOR USE AND MEETS THE ORIGINAL DESIGN CRITERIA. DIFFERENCES FROM THE ORIGINAL DESIGN, INCLUDING MAINTENANCE, REPAIR AND REPLACEMENT, SHALL BE NOTED. ESTIMATES OF COSTS/CREDITS ASSOCIATED WITH THE SUBSTITUTION (INCLUDING RE-DESIGN COSTS AND COSTS TO SUB-CONTRACTORS) SHALL BE PROVIDED TO THE ENGINEER.

5. CONTRACTOR IS RESPONSIBLE FOR ENGAGING A MODIFICATION INSPECTOR AT THE TIME OF AWARD TO COORDINATE AN INSPECTION SCHEDULE AND ENSURE PROPER DOCUMENTATION IS RETAINED THROUGHOUT THE PROJECT. REFER TO SHEET MI-01 FOR MODIFICATION INSPECTION CHECKLIST.

6. SPECIAL INSPECTIONS: UNLESS OTHERWISE SPECIFIED WITHIN THE PLANS OR REQUIRED BY THE BUILDING OFFICIAL, SPECIAL INSPECTIONS AND TESTS ARE NOT REQUIRED FOR GROUP U OCCUPANCIES, BUT NOT LIMITED TO, THOSE LISTED IN SECTION 312.1 (IBC SECTION 1704.2, EXCEPTION 2). CONTRACTOR SHALL BE RESPONSIBLE FOR DETERMINING IF ANY SPECIAL INSPECTIONS ARE REQUIRED BY THE JURISDICTION HAVING AUTHORITY. IF REQUIRED BY THE JURISDICTION, THE CONTRACTOR SHALL BE RESPONSIBLE FOR THE COORDINATION AND SCHEDULING OF THE SPECIAL INSPECTIONS WITH THE ENGINEER OF RECORD. IN THOSE CASES, SPECIAL INSPECTIONS MUST BE COMPLETED PRIOR TO FINAL INSPECTION APPROVAL.

7. INSTALLATION OF THE PROPOSED LOADING IS BY OTHERS AND IS BEYOND THE SCOPE OF THESE DRAWINGS.

8. ALL CONTRACTORS AND LOWER TIER CONTRACTORS MUST ACKNOWLEDGE IN WRITING TO TOWER OWNER AND GPD THAT THEY HAVE OBTAINED, UNDERSTAND, AND WILL FOLLOW TOWER OWNER STANDARDS OF PRACTICE, CONSTRUCTION GUIDELINES, ALL SITE AND TOWER SAFETY PROCEDURES, ALL PRODUCT LIMITATIONS AND INSTALLATION PROCEDURES USED ON SITE, AND PROPOSED MODIFICATIONS DESCRIBED. RECEIPT OF ACKNOWLEDGMENT MUST OCCUR PRIOR TO BEGINNING CONSTRUCTION OR CLIMBING. IT IS THE RESPONSIBILITY OF THE GENERAL CONTRACTOR TO PROVIDE THIS DOCUMENTATION FOR TOWER OWNER AND GPD ON COMPANY LETTERHEAD AND THE RESPONSIBILITY OF THE GENERAL CONTRACTOR TO OBTAIN THIS DOCUMENTATION FROM LOWER TIER SUBCONTRACTORS (ON SUBCONTRACTOR LETTERHEAD) AND DELIVER IT TO TOWER OWNER AND GPD.

9. IT IS ASSUMED THAT ANY STRUCTURAL MODIFICATION WORK SPECIFIED ON THESE PLANS WILL BE ACCOMPLISHED BY KNOWLEDGEABLE WORKMEN WITH TOWER CONSTRUCTION EXPERIENCE. THIS INCLUDES PROVIDING THE NECESSARY CERTIFICATIONS TO THE TOWER OWNER AND ENGINEER.

10. THESE DRAWINGS DO NOT INDICATE THE METHOD OF CONSTRUCTION. THE CONTRACTOR SHALL SUPERVISE AND DIRECT THE WORK AND SHALL BE SOLELY RESPONSIBLE FOR ALL CONSTRUCTION METHODS, MEANS, TECHNIQUES, SEQUENCES, AND PROCEDURES.

11. THE CONTRACTOR AND ALL SUB-CONTRACTORS SHALL BE RESPONSIBLE FOR THE SAFETY OF THEIR WORK FORCE, THE WORK AREA, ADJACENT AREA, AND ANY PROPERTY OCCUPANTS WHO MAY BE AFFECTED BY THE WORK UNDER CONTRACT. THE CONTRACTOR SHALL REVIEW AND ABIDE BY ALL LANDOWNER, PRIME CONTRACTOR, CARRIER, OSHA, AND LOCAL SAFETY GUIDELINES. ALL TOWER WORKERS SHALL UTILIZE APPROPRIATE FALL PROTECTION AND SAFETY EQUIPMENT THAT IS UP-TO-DATE AND INSPECTED PER OSHA AND INDUSTRY GUIDELINES. ALL WORKERS SHALL BE TRAINED AND MONITORED TO ENSURE SAFE WORKING PRACTICES ARE MAINTAINED.

12. CONTRACTOR IS RESPONSIBLE FOR TEMPORARILY REMOVING ALL COAX, T-BRACKETS, ANTENNA MOUNTS, AND ANY OTHER APPURTENANCE THAT MAY INTERFERE WITH THE TOWER MODIFICATIONS. ALL TOWER APPURTENANCES MUST BE REPLACED AND/OR RESTORED TO ITS ORIGINAL LOCATION. SOME ATTACHMENTS MAY REQUIRE CUSTOM MODIFICATIONS TO PROPERLY FIT THE MODIFIED REGION OF THE STRUCTURE. THESE CUSTOMIZATIONS ARE DESIGNED BY OTHERS AND MUST BE APPROVED BY THE ENGINEER PRIOR TO REMOVING SUCH ATTACHMENTS. ANY CARRIER DOWNTIME MUST BE COORDINATED WITH THE TOWER OWNER IN WRITING.

13. CONTRACTOR SHALL ONLY WORK WITHIN THE LIMITS OF THE TOWER OWNER'S PROPERTY OR LEASE AREA AND APPROVED EASEMENTS. IT IS THE RESPONSIBILITY OF THE CONTRACTOR TO VERIFY WORK IS WITHIN THESE BOUNDARIES. CONTRACTOR SHALL EMPLOY A SURVEYOR AS REQUIRED. ANY WORK OUTSIDE THESE BOUNDARIES SHALL BE APPROVED IN WRITING BY THE LAND OWNER PRIOR TO MOBILIZATION. CONSTRUCTION STAKING AND BOUNDARY MARKING IS THE RESPONSIBILITY OF THE CONTRACTOR.

14. THE STRUCTURAL INTEGRITY OF THIS DESIGN EXTENDS TO THE COMPLETE CONDITION ONLY. THE CONTRACTOR MUST BE COGNIZANT THAT THE REMOVAL OF ANY STRUCTURAL COMPONENT HAS THE POTENTIAL TO CAUSE THE PARTIAL OR COMPLETE COLLAPSE OF THE STRUCTURE. ALL NECESSARY PRECAUTIONS MUST BE TAKEN TO ENSURE THE STRUCTURAL INTEGRITY, INCLUDING, BUT NOT LIMITED TO, ENGINEERING ASSESSMENT OF CONSTRUCTION STRESSES WITH INSTALLATION MAXIMUM WIND SPEED AND/OR TEMPORARY BRACING AND SHORING.

15. WORK SHALL ONLY BE PERFORMED DURING CALM DRY DAYS (WINDS LESS THAN 10-MPH). CONTRACTOR IS RESPONSIBLE FOR ALL TEMPORARY LOCAL TOWER SHORING, TEMPORARY GLOBAL TOWER SHORING, AND ALL SHORING OF SURROUNDING BUILDINGS, PADS, AND OTHER OUTDOOR SITE OBSTRUCTIONS. ALL SHORING, TEMPORARY BRACING, AND TEMPORARY SUPPORTS ARE THE RESPONSIBILITY OF THE CONTRACTOR.

16. MODIFICATIONS SHOWN SHALL BE INSTALLED ON ALL THREE (3) TOWER LEGS/FACES UNLESS NOTED OTHERWISE.

17. FAA/FCC FILING AND LIGHTING MAY BE REQUIRED. ALL GOVERNMENTAL REGULATORY DETERMINATIONS AND FILINGS BY OTHERS, NOT GPD.

18. VERIFY IF THIS STRUCTURE IS AN FM TOWER AND TAKE NECESSARY ACTIONS TO PROVIDE SAFE WORKING CONDITIONS INCLUDING, BUT NOT LIMITED TO, HAVING FM SIGNAL TURNED OFF. CONTRACTOR SHALL HAVE PROPER RADMAN FOR NOTIFICATION OF EXCESSIVE RF EXPOSURE FOR ALL INDIVIDUALS WORKING ON SITE IF FM ANTENNAS ARE PRESENT.

19. ALL MANUFACTURERS HARDWARE AND ASSEMBLY INSTRUCTIONS SHALL BE FOLLOWED EXACTLY. DEVIATION FROM THE INSTRUCTIONS IS UNACCEPTABLE AND REQUIRES WRITTEN APPROVAL FROM ENGINEER.

20. DO NOT SCALE DRAWINGS.

21. THE CLIMBING FACILITIES, SAFETY CLIMB AND ALL ASSOCIATED HARDWARE SHALL NOT BE IMPEDED OR MODIFIED WITHOUT THE WRITTEN CONSENT OF GPD.

22. ANY WORK PERFORMED WITHOUT A PREFABRICATION MAPPING IS DONE AT THE RISK OF THE GC AND/OR FABRICATOR.

23. IMPROPER FIT-UP OF NEW BOLTED HARDWARE DUE TO OVERSIZED , DOUBLE-PUNCHED, OR SLOTTED HOLES FOUND ON THE EXISTING STRUCTURE SHALL BE REPORTED TO GPD AND THE TOWER OWNER IMMEDIATELY. INSTALLATION OF SUCH HARDWARE WILL NOT BE ACCEPTABLE AND ALL COSTS ASSOCIATED WITH REMEDYING THE INSTALLATION WILL BE THE RESPONSIBILITY OF THE GC.

STRUCTURAL STEEL NOTES

1. ALL NEW STEEL SHALL BE HOT-DIPPED GALVANIZED PER ASTM A123, ASTM A153/A153M, OR ASTM A653 G90, AS APPLICABLE FOR FULL WEATHER PROTECTION. FOR HIGH STRENGTH STEEL FASTENERS WHERE HOT-DIPPED GALVANIZING IS NOT PERMITTED MAGNI 565 COATING (OR ENGINEER APPROVED EQUIVALENT) SHALL BE USED. IN ADDITION ALL NEW STEEL SHALL BE PAINTED TO MATCH EXISTING TOWER STEEL. CONTRACTOR SHALL OBTAIN WRITTEN PERMISSION TO PROTECT STEEL BY ANY OTHER MEANS.

2. ALL EXPOSED STRUCTURAL STEEL AS THE RESULT OF THIS SCOPE OF WORK INCLUDING, BUT NOT LIMITED TO, DAMAGED MEMBERS, FIELD WELDS, FIELD CUT MEMBERS, FIELD DRILLED HOLES, AND SHAFT INTERIORS (WHERE APPLICABLE), SHALL BE SOLVENT CLEANED AND HAVE TWO (2) COATS OF BRUSHED ON ZRC ZINC RICH COLD GALVANIZING PAINT APPLIED AND SHALL BE PAINTED TO MATCH THE TOWER FINISH (WHERE APPLICABLE). PHOTO DOCUMENTATION IS REQUIRED TO BE SUBMITTED TO THE MODIFICATION INSPECTOR.

3. ALL STRUCTURAL STEEL SHALL CONFORM TO THE LISTED REQUIREMENTS U.N.O. IN THESE DRAWINGS:

MONOPOLES:

• STRUCTURAL SHAPES AND PLATE:	ASTM A572 GRADE 65 (Fy=65 KSI)
• WELDING ELECTRODES, SMAW:	E80XX
• WELDING ELECTRODES, FCAW:	E8XT-XX

SELF-SUPPORT AND GUYED TOWERS

• STRUCTURAL SHAPES AND PLATE:	ASTM A572 GRADE 50 (Fy=50 KSI)
• GUY WIRES:	ASTM A475 GRADE EHS
• BRIDGE STRAND:	ASTM A586 GRADE 1
• WELDING ELECTRODES, SMAW:	E70XX
• WELDING ELECTRODES, FCAW:	E7XT-XX

ALL TOWER TYPES:

• STEEL ANGLE (BRACING):	ASTM A36 (Fy=36 KSI)
• STEEL ANGLE (LEGS):	ASTM A572 GRADE 50 (Fy=50 KSI)
• SOLID ROUND:	ASTM A36 (FY=36 KSI)
• PIPE (ROUND):	ASTM A53 GRADE B (Fy=35 KSI)
• HSS TUBE (ROUND):	ASTM A500 GRADE C (Fy=46 KSI)
• HSS TUBE (SQUARE):	ASTM A500 GRADE C (Fy=50 KSI)
• ANCHOR RODS:	ASTM A193 GRADE B7
• BOLTS:	ASTM A325 TYPE 1
• U-BOLTS:	ASTM A307 GRADE A
• NUTS:	ASTM A563 GRADE DH
• NUTS (ANCHOR RODS):	ASTM A194 GRADE 2H
• WASHERS (AS REQUIRED):	ASTM F436 TYPE 1
• LOCKING DEVICES:	PAL-NUT OR SPLIT WASHER

4. ALL BOLT ASSEMBLIES FOR STRUCTURAL MEMBERS REPRESENTED IN THIS DRAWING REQUIRE LOCKING DEVICES TO BE INSTALLED IN ACCORDANCE WITH THE GOVERNING PROVISIONS OF TIA/EIA-222 REQUIREMENTS, U.N.O..

5. ALL BOLTS, INCLUDING U-BOLTS, SHALL BE TIGHTENED IN ACCORDANCE WITH AISC "SNUG TIGHT" REQUIREMENTS, U.N.O..

6. ALL U-BOLTS SPECIFIED SHALL MEET THE REQUIREMENTS OF ASME B18.31.5-2011 BENT BOLTS.

7. ALL NEW BOLT ASSEMBLIES SHALL BE OF SUFFICIENT LENGTH TO ENSURE THE END OF THE BOLT IS FLUSH WITH, OR PROTRUDES BEYOND, THE FACE OF THE NUT AFTER TIGHTENING IS COMPLETE.

8. STRUCTURAL STEEL SHOP DRAWINGS SHALL BE PROVIDED TO ENGINEER FOR APPROVAL PRIOR TO FABRICATION.

9. UNLESS NOTED OTHERWISE, ALL NEW MEMBERS SHALL MAINTAIN THE EXISTING MEMBER WORK LINES AND NOT INTRODUCE ECCENTRICITIES INTO THE STRUCTURE.

10. WELDING OF ANY KIND IS NOT PERMITTED ON SITE UNLESS SPECIFIED WITHIN THESE DRAWINGS. OXY FUEL GAS WELDING OR BRAZING IS STRICTLY PROHIBITED. SPECIFICALLY, NO TORCH CUTTING OR OPEN FLAME IS PERMITTED ON SITE. ALL HOLES SHALL BE CUT WITH A GRINDER.

WELD NOTES

1. PRIOR TO COMMENCEMENT OF CONSTRUCTION, THE CONTRACTOR SHALL PERFORM A NONDESTRUCTIVE TEST ON THE EXISTING BASE PERIMETER WELD TO INSURE ITS STRUCTURAL INTEGRITY IN ACCORDANCE WITH AWS D1.1/D1.1M, "STRUCTURAL WELDING CODE-STEEL". IF ANY FLAWS ARE DISCOVERED, THE PROJECT SHALL BE PUT ON HOLD UNTIL REMEDIES TO CORRECT THE DEFICIENCIES ARE DESIGNED AND INSTALLED. THE TOWER OWNER AND THE ENGINEER SHALL BE CONTACTED IMMEDIATELY UPON A FAILING NONDESTRUCTIVE TESTING RESULT.

2. ALL WELDING SHALL BE DONE IN ACCORDANCE WITH AWS D1.1/D1.1M, "STRUCTURAL WELDING CODE-STEEL" (LATEST EDITION).

3. CONTRACTOR IS RESPONSIBLE FOR COMMISSIONING A THIRD PARTY CERTIFIED WELD INSPECTOR (CWI) THROUGHOUT THE ENTIRETY OF THE PROJECT. A PASSING CWI REPORT SHALL BE PROVIDED TO THE MODIFICATION INPECTOR UPON COMPLETION OF THE PROJECT.

4. WELDING CERTIFICATES MUST BE PROVIDED TO CWI AND GPD PRIOR TO WELDING CONTRACTOR BEGINNING WORK ON SITE. CERTIFICATE WILL BE ASKED FOR AS PART OF INSPECTION PROCESS. ALL WELDING SHOULD BE PERFORMED BY AN AWS QUALIFIED WELDER WHO HAS EXPERIENCE WITH GALVANIZED SURFACES AND IN ACCORDANCE WITH ANSI/AWS D1.1 AND ANSI Z 49.1 OR LATEST EDITIONS.

5. INSTALL 3000° (NFPA 701) FIRE BLANKET AROUND ALL COAX AT AND BELOW EACH WELDING PROCEDURE AND ELEVATION. COAX IS FLAMMABLE AND CAN CATCH FIRE IF PROPER PRECAUTIONS ARE NOT MADE TO SHIELD COAX FROM ALL WELDING PROCEDURES. IN ADDITION, COAX SHALL BE PUSHED AWAY FROM TOWER FACE WHERE WELDING IS BEING PERFORMED.

6. CONTRACTOR SHALL EXERCISE CAUTION WHEN WELDING ON A GALVANIZED SURFACE. ADDITIONAL SPLATTER AND SPARKS SHALL BE ANTICIPATED GIVEN THE PREVIOUSLY GALV. SURFACE. IF THE WELD MATERIAL IS CONTAMINATED WITH ZINC IT DOES NOT PROVIDE A STRUCTURAL WELD. FUMES CREATED FROM WELDING ON A PREVIOUSLY GALV. SURFACE CAN BE HAZARDOUS. PRIOR TO WELDING, ALL SURFACES SHALL BE PROPERLY GROUND TO REMOVE GALVANIZING, SCALE, SLAG, RUST OR ANY OTHER MATERIAL TO PREVENT PROPER WELDING.

7. ALL FIELD WELDS SHALL BE TOUCHED UP WITH TWO COATS OF COLD GALVANIZING PAINT (ZRC OR APPROVED EQUIVALENT), INCLUDING THE INTERIOR OF MONOPOLE SHAFTS, WHERE ACCESS PERMITS. IN ANY AREAS AFFECTED BY ANY WELDING. PHOTO DOCUMENTATION IS REQUIRED TO BE SUBMITTED TO THE MODIFICATION INSPECTOR.

8. WATER SHALL BE ON SITE, OF ADEQUATE AMOUNT, AND AVAILABLE AT SHORT NOTICE AT ALL TIMES DURING WELDING ACTIVITY. A MINIMUM OF 500 GAL. OF WATER SHALL BE PROVIDED. WATER SHALL BE CAPABLE OF REACHING HEIGHT WHERE WELDING IS BEING PERFORMED. IN ADDITION, A MINIMUM OF SIX (6) 10 LB. CLASS ABC MULTIPURPOSE FIRE EXTINGUISHERS FULLY CHARGED AND CAPABLE OF DISCHARGE WITHIN 30 SECONDS OF DETECTING A FIRE SHALL BE PROVIDED. FIRE EXTINGUISHERS SHALL BE STRATEGICALLY LOCATED AROUND COMPOUND AND IN THE AIR (I.E. ON THE MAN LIFT WHERE WELDING IS BEING PERFORMED).

9. CLEAN OUT ALL DEBRIS THROUGHOUT TOWER AND STRUCTURE BASE PRIOR TO WELDING.

10. THE CONTRACTOR SHALL TAKE COOLING EFFECTS OF THE WELDED MATERIAL INTO CONSIDERATION (I.E. EXPANSION OF HOT MATERIAL AND CONTRACTION OF COOLED MATERIAL).

BOLT SCHEDULE

BOLT DIAMETER	STANDARD HOLE	SHORT SLOT	MIN. EDGE DISTANCE	C-C SPACING
1/2	9/16	9/16x11/16	7/8	1-1/2
5/8	11/16	11/16x7/8	1-1/8	1-7/8
3/4	13/16	13/16x1	1-1/4	2-1/4
7/8	15/16	15/16x1-1/8	1-1/2	2-5/8
1	1-1/8	1-1/8x1-5/16	1-3/4	3

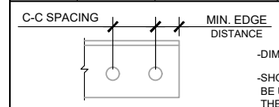

-DIMENSIONS GIVEN IN INCHES

-SHORT SLOT HOLES SHALL ONLY BE USED WHEN DEPICTED ON THE PLANS

WORKABLE GAGES

LEG	6	5	4	3-1/2	3	2-1/2	2	1-3/4
G	3-1/2	3	2-1/2	2	1-3/4	1-3/8	1-1/8	1

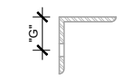

-DIMENSIONS GIVEN IN INCHES

-MATCH EXISTING WHEN APPLICABLE

ALLOWABLE ANGLE COPE

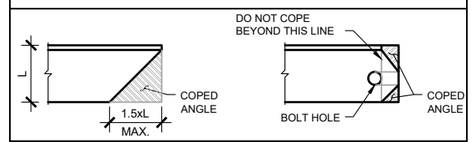

BOLTING DETAILS

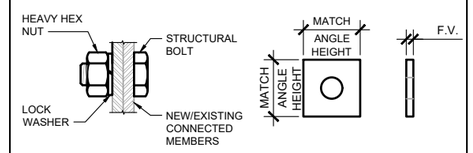

1. ALL DIMENSIONS REPRESENTED IN THESE TABLES ARE AISC MINIMUM REQUIREMENTS. CONTRACTOR SHALL VERIFY EXISTING CONDITIONS IN FIELD AND NOTIFY ENGINEER IF DISTANCES ARE LESS THAN THOSE PROVIDED.
2. THE DIMENSIONS PROVIDED ARE MINIMUM REQUIREMENTS. ACTUAL DIMENSIONS OF PROPOSED MEMBERS WITHIN THESE DRAWINGS MAY VARY FROM THE AISC MINIMUM REQUIREMENTS.
3. AS AN ALTERNATIVE TO USING A LOCK WASHER PAL-NUTS CAN BE INSTALLED ABOVE THE HEX NUT. ALL BOLTS MUST HAVE LOCKING DEVICES INSTALLED AS PART OF THE ASSEMBLY.
4. ADDITIONAL HARDENED FLAT WASHERS MAY BE REQUIRED IN CASES WHERE OVERSIZED OR SLOTTED HOLES ARE PRESENT. EXISTING CONDITIONS SHALL BE APPROVED BY THE EOR.

8/13/21

GPD GROUP, INC.®
520 South Main Street, Suite 2531
Akron, OH 44311
330.572.2100 Fax 330.572.2102

at&t

SHARON HEIGHTS
USID #: 113035

DESIGN DRAWINGS PREPARED FOR:

INFRASTRUCTURE PARTNERS

CLIENT #: CCL05707

REV.	DATE	DESCRIPTION
0	8/13/21	INITIAL RELEASE

SHARON HEIGHTS
10 LAWLER RANCH ROAD
MENLO PARK, CA 94025

PROJECT NOTES

ISSUED FOR:	
PERMIT	8/13/2021
BID	-
CONSTRUCTION	-
RECORD	-

ENGINEER	DESIGNER
MM	JMJ
PROJECT MANAGER	APPROVED BY
DP	JNK

JOB NO.
2021723.15.113035.03

N-01

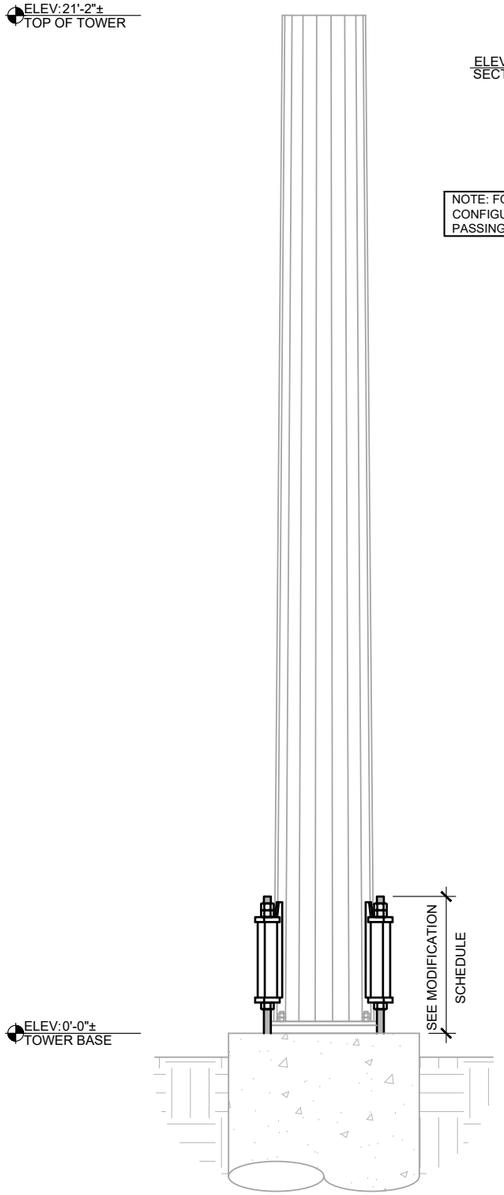

NOTE: FOR FULL ANTENNA CONFIGURATION SEE ASSOCIATED PASSING ANALYSIS.

TOWER ELEVATION

N.T.S.

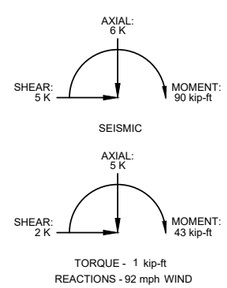

POLE SPECIFICATIONS

POLE SHAPE:	18-SIDED
TAPER:	0.1200 IN/FT
SHAFT STEEL	ASTM A53 GRADE B (Fy=35 KSI)
BASE PLATE STEEL:	ASTM A36
ANCHOR RODS:	1"Ø ASTM F1554 GRADE 55

POLE SECTION DATA

SHAFT SECTION	SECTION LENGTH (FT)	PLATE THICKNESS (IN)	LAP SPLICE (IN)	DIAMETER (IN)	
				@ TOP	@ BOTTOM
1	21.10	0.2500		20.6260	24.8250

NOTE: DIMENSIONS SHOWN DO NOT INCLUDE GALVANIZING TOLERANCES

MODIFICATION SCHEDULE

MEMBER TYPE	ELEVATION	EXISTING MEMBER	NEW MEMBER	REFERENCE DETAIL/SHEET	NOTES
ANCHOR RODS W/ BRACKET	0'-0"±	(4) 1"Ø ANCHOR RODS	(3) 1-3/4"Ø ANCHOR RODS W/ BRACKETS	1/S-02	INSTALL NEW ANCHOR RODS WITH BRACKETS TO THE EXISTING TOWER BASE.

NOTES:
1. ALL MATERIAL REMOVED FROM THE TOWER SHALL BE DISPOSED OF BY THE CONTRACTOR OFF SITE.

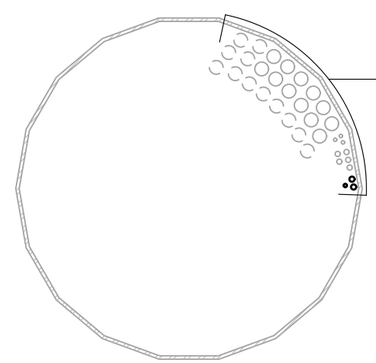

(EXISTING)
(12) 7/8" COAX TO 20 FT LEVEL
(3) 1/4" FIBER TO 20 FT LEVEL
(5) #8 POWER TRUNK TO 20 FT LEVEL
(EXISTING - TO BE REMOVED)
(12) 7/8" COAX TO 20 FT LEVEL
(PROPOSED)
(2) #6 POWER TRUNK TO 20 FT LEVEL
(1) 1/4" FIBER TO 20 FT LEVEL

COAX LAYOUT

N.T.S

REGISTERED PROFESSIONAL ENGINEER
JOHN N. KABAK
6057
STRUCTURAL
STATE OF CALIFORNIA
8/13/21

GPD GROUP, INC.®
520 South Main Street, Suite 2531
Akron, OH 44311
330.572.2100 Fax 330.572.2102

at&t
SHARON HEIGHTS
USID #: 113035

DESIGN DRAWINGS PREPARED FOR:
INFRASTRUCTURE PARTNERS
CLIENT #: CCL05707

REV.	DATE	DESCRIPTION
0	8/13/21	INITIAL RELEASE

SHARON HEIGHTS
10 LAWLER RANCH ROAD
MENLO PARK, CA 94025

TOWER ELEVATION & MODIFICATION SCHEDULE

ISSUED FOR:	
PERMIT	8/13/2021
BID	-
CONSTRUCTION	-
RECORD	-

ENGINEER	DESIGNER
MM	JMJ
PROJECT MANAGER	APPROVED BY
DP	JNK

JOB NO.
2021723.15.113035.03

S-01

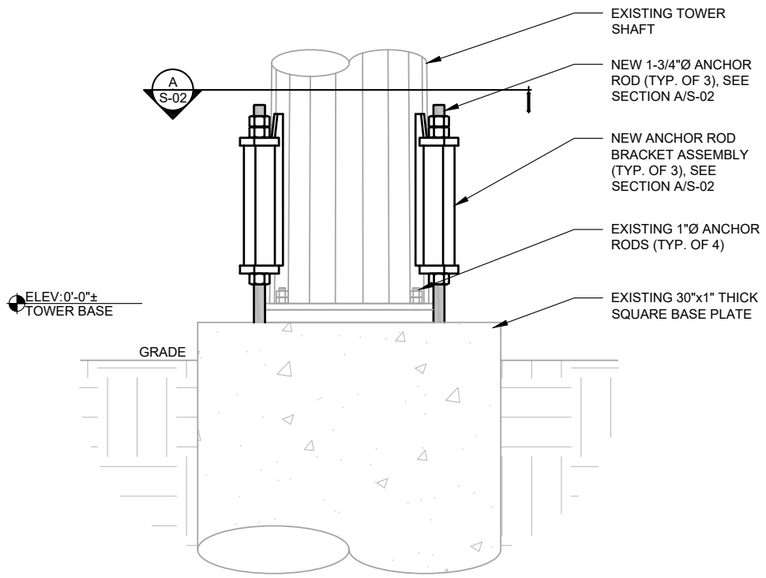

1 S-02 ELEVATION
SCALE: 1/2" = 1'-0"

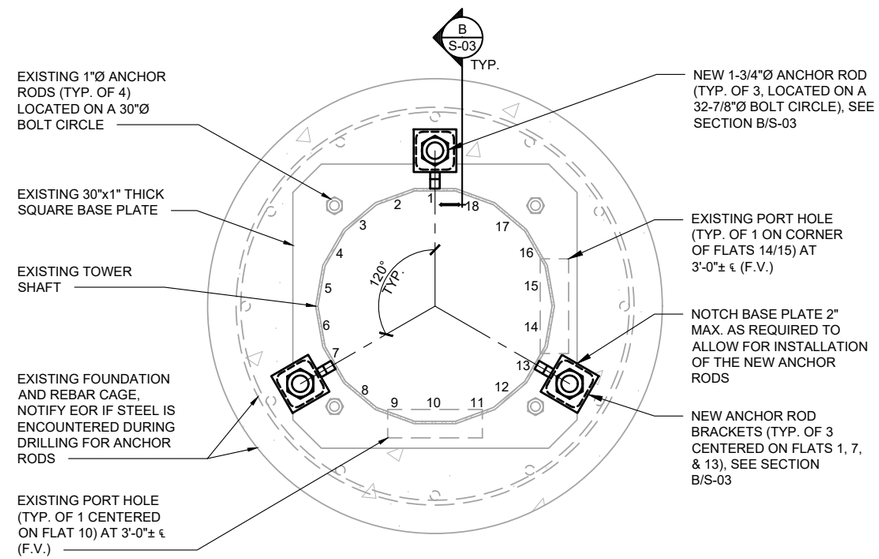

A S-02 SECTION
SCALE: 1"=1'-0"

NOTE:
1. ALL EXPOSED STEEL FROM NOTCHING THE BASE PLATE SHALL BE SOLVENT CLEANED AND TOUCHED UP WITH TWO COATS OF BRUSH APPLIED ZRC ZINC RICH COLD GALVANIZING COMPOUND.

GPD GROUP, INC.®
520 South Main Street, Suite 2531
Akron, OH 44311
330.572.2100 Fax 330.572.2102

at&t
SHARON HEIGHTS
USID #: 113035

DESIGN DRAWINGS PREPARED FOR:
INFRASTRUCTURE PARTNERS
CLIENT #: CCL05707

REV.	DATE	DESCRIPTION
0	8/13/21	INITIAL RELEASE

SHARON HEIGHTS
10 LAWLER RANCH ROAD
MENLO PARK, CA 94025

MODIFICATION DETAILS & SECTIONS

ISSUED FOR:	
PERMIT	8/13/2021
BID	-
CONSTRUCTION	-
RECORD	-

ENGINEER	DESIGNER
MM	JMJ
PROJECT MANAGER	APPROVED BY
DP	JNK

JOB NO.
2021723.15.113035.03

S-02

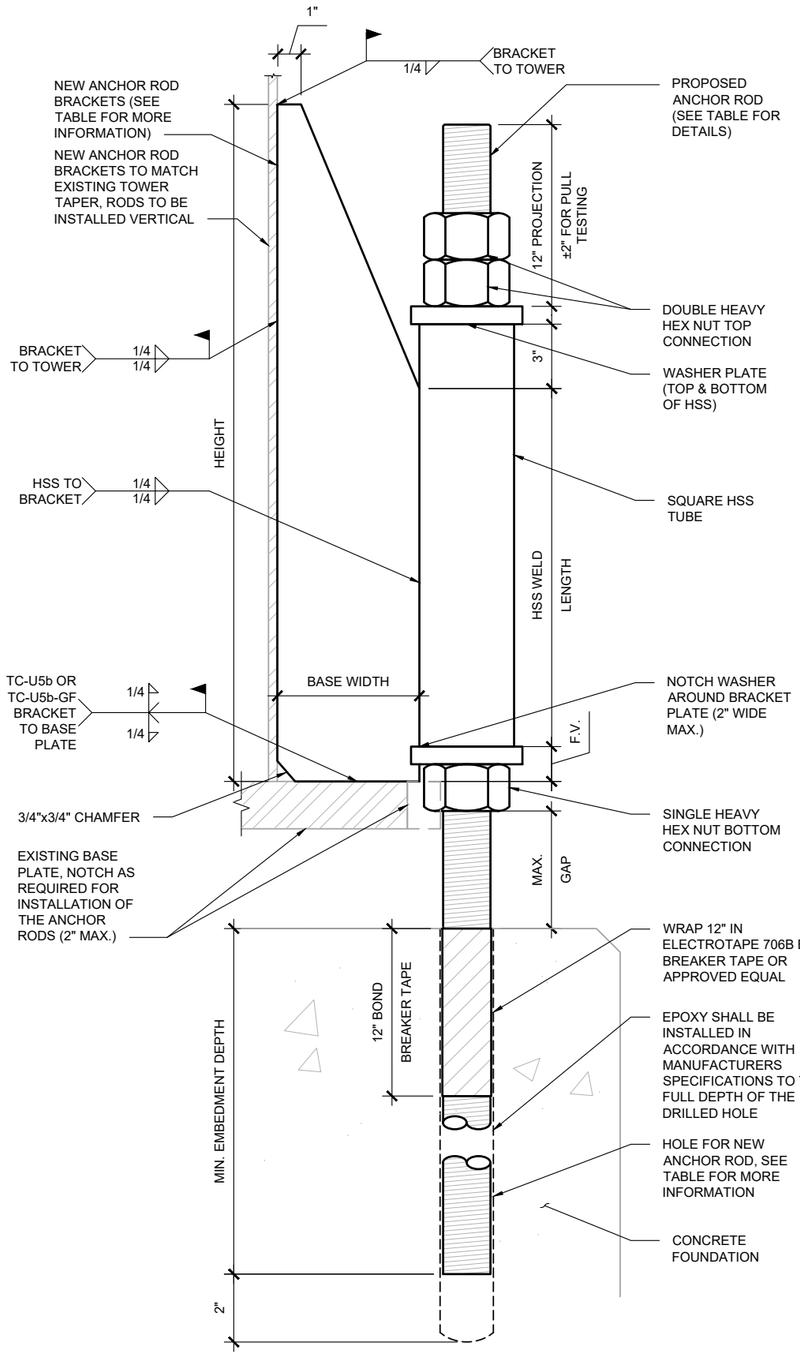

B S-03 ANCHOR ROD DETAIL

SCALE: N.T.S

ANCHOR ROD

DESCRIPTION	MEASUREMENT (IN.)
DIAMETER	1 3/4
MIN. EMBEDMENT	72
HOLE DIAMETER	2
TARGET TENSION LOAD[3]	111 KIPS
MAX. GAP	5 1/4

ANCHOR BRACKET

DESCRIPTION	MEASUREMENT (IN.)
HEIGHT	24
BASE WIDTH	2
QUANTITY	3
THICKNESS	1 1/4
HSS TUBE SIZE	HSS4x4x1/2
HSS TUBE WELD LENGTH	16

HARDWARE

DESCRIPTION	MEASUREMENT (IN.)
HEAVY HEX NUT[4]	1 3/4
QUANTITY	9
PLATE WASHER	4-1/2x4-1/2x1-1/4
QUANTITY	6

NOTES:

1. ALL SIZES AND QUANTITIES SHALL BE VERIFIED PRIOR TO FABRICATION. CONTRACTOR IS REQUIRED TO PROVIDE FINAL SHOP DRAWINGS TO ENGINEER FOR APPROVAL.
2. ALL DIMENSIONS/MEASUREMENTS ARE SHOWN IN INCHES.
3. ALL CORE DRILLED HOLES SHALL BE MECHANICALLY ROUGHENED PRIOR TO INSTALLATION OF THE NEW ANCHOR RODS.
4. AFTER ANCHOR ROD PROOF TESTING IS COMPLETE, INSTALL NUTS TO SNUG TIGHT PLUS 1/8 TURN BEFORE INSTALLING SECOND NUT FOR TOP CONNECTION.
5. ANCHOR ROD SHALL BE CUT IN FIELD BY CONTRACTOR TO MEET PROJECTION REQUIREMENTS SHOWN.

8/13/21

ANCHOR ROD NOTES

1. CONTRACTOR SHALL INSTALL RODS AND BRACKETS AT LOCATIONS INDICATED ON DRAWINGS.
2. CONTRACTOR SHALL VERIFY THAT TOWER IS PLUMB PRIOR TO THE INSTALLATION OF ANY TOWER MODIFICATIONS.
3. CONTRACTOR SHALL PROVIDE TOP AND BOTTOM HEAVY HEX NUTS FOR PROPOSED ANCHOR RODS. TOP CONNECTION SHALL BE DOUBLE NUTTED.
4. CARE SHALL BE TAKEN DURING INSTALLATION OF ANCHOR RODS SO THAT EXISTING REINFORCING STEEL AND OR ANCHOR BOLTS ARE NOT DAMAGED. CONTACT ENGINEER IMMEDIATELY IF REINFORCING ENCOUNTERED. EXISTING REINFORCEMENT INDICATED ON DRAWINGS IS ILLUSTRATIVE. ACTUAL QUANTITY AND LOCATION OF REINFORCEMENT MIGHT DIFFER FROM THAT INDICATED ON THE DRAWINGS. ANCHOR TEMPLATES MAY BE ENCOUNTERED DURING DRILLING PROCESS, AND MAY BE DRILLED THROUGH.
5. EACH ANCHOR ROD TO BE TESTED SHALL BE TESTED TO THE MAXIMUM TARGET TENSION LOAD LISTED IN THE ANCHOR ROD TABLE BELOW. PULL TESTING RESULTS SHALL BE SUPPLIED TO THE TOWER OWNER AND THE ENGINEER OF RECORD (GPD) FOR REFERENCE IN THE POST INSTALLATION OBSERVATION REPORT.
6. IT IS THE RESPONSIBILITY OF THE CONTRACTOR TO PAUSE CONSTRUCTION AT A POINT WHERE THE ANCHOR RODS CAN BE EFFECTIVELY TESTED. CONSTRUCTION MAY CONTINUE AFTER TESTING IS COMPLETE.
7. HALF OR A MINIMUM OF 4 (WHICHEVER IS GREATER) NEW ANCHOR RODS SHALL BE TESTED.
8. COMPLETE RECORDS SHALL BE MAINTAINED THROUGHOUT THE DURATION OF THE TEST. MAXIMUM LOAD INCREMENT SHALL BE 15% OF THE PROOF LOAD.
9. PULL TESTING SHALL BE IN ACCORDANCE WITH ASTM E488M-10.
10. IF A DISPLACEMENT GREATER THAN 0.01 INCHES, MEASURED FROM THE BASE LINE, REMAINS AFTER THE FIRST TEST CYCLE, FURTHER TESTS SHALL BE PERFORMED UP TO A MAXIMUM OF 3 TEST CYCLES TO DETERMINE IF ANCHOR ROD MOVEMENT CONTINUES TO ACCUMULATE. TOTAL RESIDUAL MOVEMENT SHALL NOT EXCEED 0.05 INCHES. INCREMENTAL RESIDUAL MOVEMENTS RECORDED FROM EACH TEST CYCLE MUST BE DECREASING IN VALUE AND STABILIZE TO A VALUE NO MORE THAN 0.01 INCHES. ANCHORS NOT MEETING THE TOTAL RESIDUAL MOVEMENT AND/OR THE INCREMENTAL RESIDUAL MOVEMENT LIMITATIONS SHALL BE CONSIDERED TO HAVE FAILED THE TEST.
11. INSTALLATION OF GROUT AND/OR BOTTOM NUT FLUSH TO BASE PLATE IS PROHIBITED PRIOR TO COMPLETION OF ANCHOR ROD PULL TEST.
12. WHEN COMPLETED WITH EPOXY INSTALLATION, THE TOP OF THE EPOXY SHALL BE EQUAL TO OR HIGHER THAN THE TOP OF THE FOUNDATION. SUCH THAT WATER IS NOT ABLE TO COLLECT IN THE ANNULAR AREA AROUND THE EXPOSED PORTION OF THE ANCHOR ROD.
13. NEW ANCHOR RODS TO BE HOT DIPPED GALVANIZED TO A MINIMUM OF 15" BELOW THE CONCRETE SURFACE.
14. THE ADHESIVE ANCHOR SYSTEM USED FOR POST-INSTALLED ANCHORAGE TO CONCRETE SHALL CONFORM TO THE MOST RECENTLY PUBLISHED ACI 355.4, ACCEPTANCE CRITERIA FOR QUALIFICATION OF POST-INSTALLED ADHESIVE ANCHORS IN CONCRETE AND COMMENTARY. THE ANCHOR SYSTEM SHALL BE ONE OF THE FOLLOWING:

    A. HILTI HIT-RE 500 V3 EPOXY (ICC #: ESR-3814)

    B. AN ENGINEER APPROVED EQUAL MEETING ACI 355.4 AND THE MINIMUM BOND STRESS VALUES BELOW. BULK MIXED ADHESIVES ARE NOT PERMITTED.
15. THE ADHESIVE ANCHORS SELECTED FROM THE PARAGRAPH ABOVE SHALL BE SUPPLIED AS AN ENTIRE SYSTEM. THE SYSTEM SHALL INCLUDE, BUT NOT BE LIMITED TO, THE NEW ADHESIVE CARTRIDGE, A CLEAN MIXING NOZZLE, EXTENSION TUBE, A DISPENSING GUN, AND ALL MANUFACTURER RECOMMENDED SUPPLIES FOR PROPERLY CLEANING THE HOLE. THE CONTRACTOR IS RESPONSIBLE FOR PROVIDING ALL EQUIPMENT REQUIRED FOR INSTALLATION OF THE ADHESIVE ANCHOR SYSTEM.
16. ANCHORAGE DESIGN IS IN ACCORDANCE WITH APPENDIX D OF ACI 318-11. FOR ADHESIVE ANCHORS, THE FOLLOWING MINIMUM VALUES FOR BOND STRESS WERE ASSUMED FOR THE DESIGN USING THE ABOVE ADHESIVE ANCHOR ASSEMBLIES:

    A. CRACKED CONCRETE BOND STRESS (BASED ON HAMMER DRILLING):
    T_{CR} = 1130 PSI
17. ALL-THREADED ROD TO BE USED IN ADHESIVE ANCHOR ASSEMBLIES SHALL CONFORM TO THE ASTM SPECIFICATIONS REPRESENTED WITHIN THESE DRAWINGS. THREADS SHALL BE UNC COARSE THREADS, UNLESS NOTED OTHERWISE. COMPATIBLE NUTS AND WASHERS SHALL BE FURNISHED WITH ALL THE ALL-THREAD ROD CONSIDERED PART OF THE ASSEMBLY. THE COST OF HARDWARE SHALL BE CONSIDERED INCIDENTAL TO THE ADHESIVE ANCHOR ASSEMBLY.
18. NUTS, WASHERS, AND OTHER HARDWARE USED WITH AN ALL-THREADED BAR ADHESIVE ANCHOR SYSTEM SHALL HAVE A MATERIAL OR AN ALLOY DESIGNATION THAT MATCHES THE ALL-THREAD MATERIAL/ALLOY. GALVANIZED ASSEMBLIES SHALL BE HOT-DIP GALVANIZED IN ACCORDANCE WITH ASTM A153 CLASS C. ELECTROPLATE GALVANIZING IS NOT ACCEPTABLE. DISSIMILAR METAL ASSEMBLIES SHALL BE SEPARATED BY NYLON, EPDM, OR OTHER APPROVED NON-METALLIC WASHERS.
19. REINFORCING BARS TO BE USED IN ADHESIVE ANCHOR ASSEMBLIES SHALL CONFORM TO ASTM A615, A706, OR A995.
20. EMBEDMENT DEPTH AND ANCHOR PROJECTION (STICK-OUT) FROM CONCRETE SURFACE SHALL BE AS SHOWN ON THE DRAWING OR DETAIL FOR THE PARTICULAR ANCHOR OR ANCHOR GROUP BEING INSTALLED. ABSENT OF ANY INFORMATION THE MINIMUM STICK-OUT SHALL BE 12".
21. ADHESIVES SHALL BE STORED AND INSTALLED AT THE SERVICE TEMPERATURE RANGES RECOMMENDED BY THE MANUFACTURER.
22. ADHESIVE ANCHORS SHALL BE INSTALLED BY QUALIFIED PERSONNEL TRAINED TO INSTALL ADHESIVE ANCHORS IN ACCORDANCE WITH THE SPECIFICATIONS. POST-INSTALLED ADHESIVE ANCHORS SHALL BE INSTALLED AND CLEANED IN ACCORDANCE WITH THE MANUFACTURERS PRINTED INSTALLATION INSTRUCTIONS (MPII).
23. INSTALLATION OF ADHESIVE ANCHORS HORIZONTALLY OR UPWARDLY INCLINED TO SUPPORT SUSTAINED TENSION LOADS SHALL BE PERFORMED BY PERSONNEL CERTIFIED BY THE ACI/CRSI ADHESIVE ANCHOR INSTALLER CERTIFICATION PROGRAM. THESE ANCHORS ARE DESIGNATED WITH A (CERT) AFTER THE ANCHOR CALL-OUT. THESE ANCHORS SHALL BE CONTINUOUSLY INSPECTED DURING INSTALLATION BY AN INSPECTOR SPECIALLY APPROVED FOR THAT PURPOSE BY THE BUILDING OFFICIAL.
24. THE INSTALLERS QUALIFICATIONS SHALL BE SUBMITTED AND APPROVED IN ACCORDANCE WITH THE SPECIFICATIONS.
25. INSTALLED ADHESIVE ANCHORS SHALL BE SECURELY FIXED IN-PLACE TO PREVENT DISPLACEMENT WHILE THE ADHESIVE CURES. UNLESS SHOWN OTHERWISE WITHIN THE DRAWINGS, ANCHORS SHALL BE INSTALLED PERPENDICULAR TO THE CONCRETE SURFACE. ANCHORS DISPLACED PRIOR TO ADHESIVE CURING SHALL BE CONSIDERED DAMAGED AND ARE THE RESPONSIBILITY OF THE CONTRACTOR.
26. REINFORCING BARS OR ALL-THREADED BARS SHALL NOT BE BENT AFTER BEING ADHESIVELY EMBEDDED IN HARDENED, SOUND CONCRETE, UNLESS PERMITTED BY THE ENGINEER.
27. IT IS UP TO THE CONTRACTOR'S DISCRETION REGARDING THE METHOD FOR ROUGHENING CORED DRILLED HOLES FOR NEW ANCHOR RODS, WHICH INCLUDES BUT IS NOT LIMITED TO CREATING SPECIAL TOOLING OR PURCHASING TOOLING OFF-THE-SHELF. WIRE BRUSH CLEANING PER THE MANUFACTURER'S SPECIFICATIONS SHALL NOT BE CONSIDERED AS AN EFFECTIVE METHOD OF MECHANICALLY ROUGHENING CORE DRILLED HOLES. ONCE COMPLETED, THE SURFACE ROUGHNESS OF CORED DRILLED HOLES SHALL BE TO AN AMPLITUDE SIMILAR TO THAT ACHIEVED BY DRILLING WITH A VIBRATORY HAMMER DRILL.

GPD GROUP, INC.®
520 South Main Street, Suite 2531
Akron, OH 44311
330.572.2100 Fax 330.572.2102

at&t

SHARON HEIGHTS
USID #: 113035

DESIGN DRAWINGS PREPARED FOR:

INFRASTRUCTURE PARTNERS

CLIENT #: CCL05707

REV.	DATE	DESCRIPTION
0	8/13/21	INITIAL RELEASE

SHARON HEIGHTS
10 LAWLER RANCH ROAD
MENLO PARK, CA 94025

ANCHOR ROD DETAILS & NOTES

ISSUED FOR:	
PERMIT	8/13/2021
BID	-
CONSTRUCTION	-
RECORD	-

ENGINEER	DESIGNER
MM	JMJ
PROJECT MANAGER	APPROVED BY
DP	JNK

JOB NO.
2021723.15.113035.03

S-03

County of San Mateo - Planning and Building Department

ATTACHMENT D

AT&T Sharon Heights CCL05707 – 10 Lawyer Ranch "C", Menlo Park

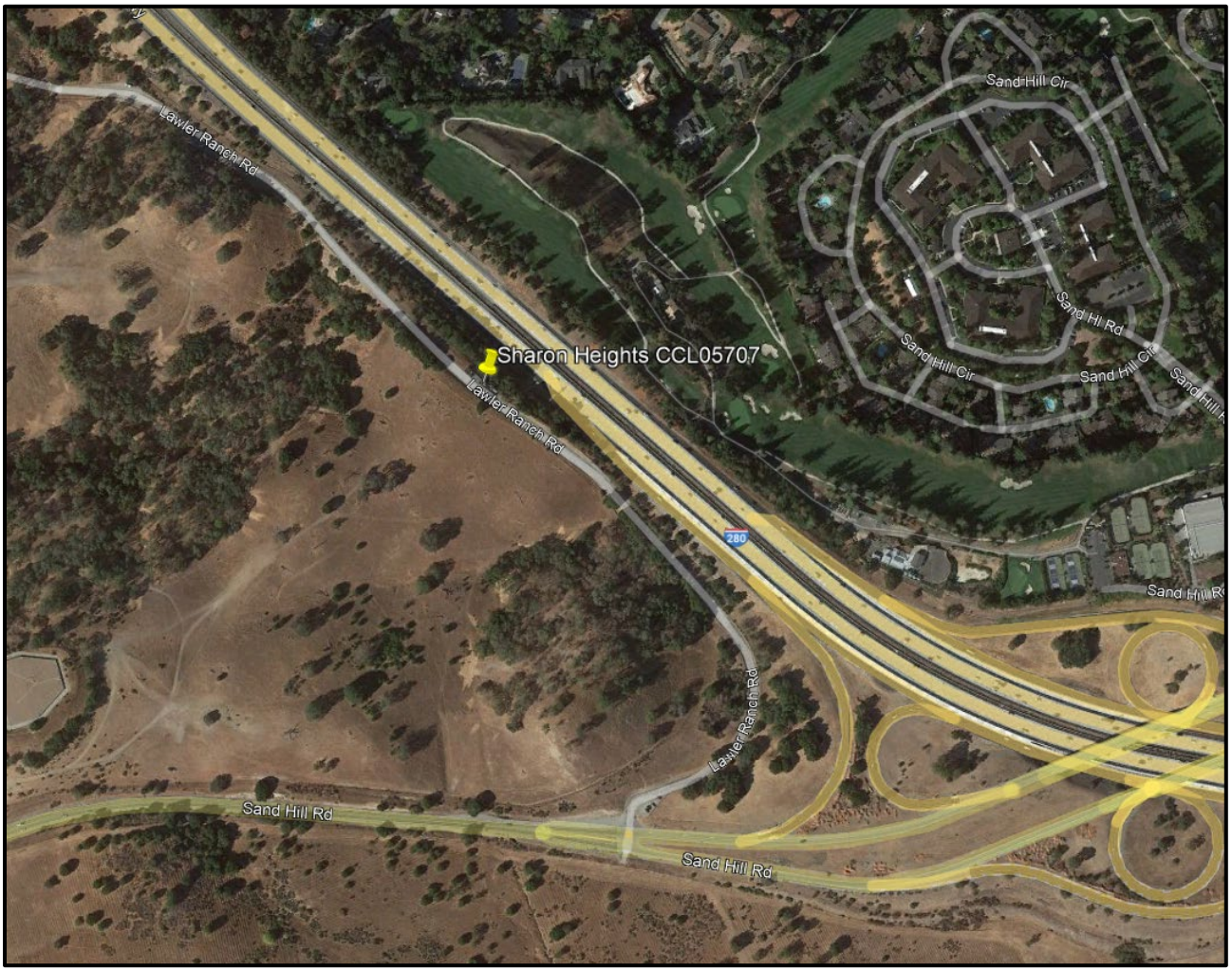


NO
TRESPASSING
Authorized
Personnel Only


INFORMATION
INFORMACIÓN
NO TRESPASSING
INFORMATION
NOTICE
Radio frequency fields beyond this point may exceed the FCC general public exposure limit
Obey all posted signs and site guidelines for working in radio frequency environments.
SITE NO.
0
3
2
ACID
Property of AT&T
Authorized Personnel Only
No Trespassing
Violators will be Prosecuted
In case of emergency, or prior to performing maintenance on this site, call 800-638-2822 and reference cell site number
at&t


AT&T Panel
DANGER HIGH-VOLTAGE
SUITABLE FOR USE AS SERVICE ENTRANCE EQUIPMENT
MAIN DISCONNECT
AT&T METER
CN5707
SHARON HEIGHTS
10 Lawler Ranch Rd
Menlo Park, CA 94062


3


1C/2C LTE
3C WCS


WARNING
Entering this area can expose you to lead from lead acid batteries.
Lead is known to the State of California to cause cancer and birth defects or other reproductive harm.
For more information go to
www.P65Warnings.ca.gov
0
3
2
ACID
Did You Sign The Site Log Book???

County of San Mateo - Planning and Building Department

ATTACHMENT E

County of San Mateo

Planning & Building Department

455 County Center, 2nd Floor
Redwood City, California 94063
650/363-4161 Fax: 650/363-4849

Mail Drop PLN122
plngbldg@co.sanmateo.ca.us
www.co.sanmateo.ca.us/planning

November 17, 2010

AT & T/NSA Wireless
James Singleton
2000 Crow Canyon Place, Suite 400
San Ramon, CA 94583

PROJECT FILE

Dear Mr. Singleton :

Subject:	**LETTER OF DECISION**
File Number:	PLN2010-00205
Location:	10 Lawler Ranch Road, "C", Menlo Park
APN:	adjacent to 073-250-050

On November 10, 2010, the San Mateo County Planning Commission considered a Use Permit, pursuant to Sections 6500 and 6512 of the County Zoning Regulations, and Architectural Review Exemption, pursuant to the State Streets and Highways Code, to allow the co-location of a new AT&T wireless telecommunications facility immediately adjacent to an existing telecommunications facility. The proposed AT&T facility will primarily consist of (1) a 22-foot high monopole; (2) nine antennas mounted on the pole; and (3) five equipment cabinets within a 15 ft. by 25 ft. lease area to be enclosed by a 7 ft. fence. The parcel is located in a CalTrans right-of-way, on the west side of I-280, in the unincorporated Stanford Lands area of San Mateo County.

Based on information provided by staff and evidence presented at the hearing, the Planning Commission approved the project with the conditions of approval as shown in Attachment A.

Any interested party aggrieved by the determination of the Planning Commission has the right of appeal to the Board of Supervisors within ten (10) business days from such date of determination. The appeal period for this matter will end at **5:00 p.m. on November 29, 2010.**

If you have questions regarding this matter, please contact Lisa Aozasa at 650/363-4852.

Sincerely,

Rosario Fernandez
Planning Commission Secretary
Pcd1100U_rf (Caltrans)

Enclosure: San Mateo County Survey-An online version of our Customer Survey is also available at: http://www.co.sanmateo.ca.us/planning/survey

Attachment A

County of San Mateo
Planning and Building Department

FINDINGS AND CONDITIONS OF APPROVAL

Permit or Project File Number: PLN 2009-00351 Hearing Date: November 10, 2010

Prepared By: Lisa Aozasa, Senior Planner Adopted By: Planning Commission

FINDINGS

Regarding the Negative Declaration, Found:

1. That the Negative Declaration is complete, correct and adequate and prepared in accordance with the California Environmental Quality Act and applicable State and County Guidelines.

2. That, on the basis of the Initial Study, comments received thereto, and testimony presented and considered at the public hearing, there is no substantial evidence that the project, if subject to the mitigation measures contained in the Negative Declaration, will have a significant effect on the environment.

3. That the Negative Declaration reflects the independent judgment of San Mateo County.

Regarding the Use Permit, Found:

4. That the establishment, maintenance, and/or conducting of the proposed use will not, under the circumstances of the particular case, be detrimental to the public welfare or injurious to property or improvements in said neighborhood. The cumulative RF level for this project site will be 16.5% of the applicable public exposure limit at ground level. There is no evidence to suggest that this use will impact nearby property or public improvements.

5. That the project is necessary for the public health, safety, convenience or welfare, as it will allow for increased transmission capability for wireless data transfer.

Regarding the Architectural Review Exemption, Found:

6. That the proposed AT&T wireless telecommunications facility will not be visible from the

Junipero Serra I-280 Scenic Corridor, due to distance, difference in elevation/topography, and screening provided by existing vegetation.

CONDITIONS OF APPROVAL

Current Planning Section

1. This approval applies only to the proposal, documents and plans described in this report and submitted to and approved by the Planning Commission on November 10, 2010. Minor adjustments to the project in the course of applying for building permits may be approved by the Community Development Director if they are consistent with the intent of, and in substantial conformance with, this approval.

2. Prior to final inspection for the building permit, the applicant shall paint and maintain the monopole and antennas a medium gray color to blend in, and have low visibility from the scenic roads in the area. The color shall match the existing adjacent facilities.

3. The applicant shall submit the following fees to the Current Planning Section:

   Within four (4) working days of the final approval date of this permit, the applicant shall pay an environmental filing fee of $2,010.25 (fee effective January 1, 2010), as required under Fish and Game Code Section 711.4(d), plus a $50.00 recording fee (total $2,060.25). The check shall be made payable to the San Mateo County Clerk, and submitted to the project planner to file with the Notice of Determination.

4. This use permit shall be valid for ten years following the date of final approval. The applicant shall file for a renewal of this permit six months prior to expiration with the County Planning and Building Department, if continuation of this use is desired.

5. At the time of use permit renewal, if staff has determined, based on a field inspection, that the color of the antennas is no longer in compliance with the approved color of non-reflective gray, the applicant shall repaint the structure and/or antennas.

6. The applicant shall receive and maintain approval from the Federal Communications Commission (FCC) for the operation of the project at this site. Upon receipt of this approval, the applicant shall supply the Current Planning Section with proof of approval. If this approval is ever revoked, the applicant shall inform the Current Planning Section of the revocation within 30 days of notice of revocation.

7. Any changes in use or intensity of use shall require an amendment to the use permit. Amendment to this use permit shall require compliance with all application, fee payment, and public hearing requirements, prior to construction.

8. This installation shall be removed in its entirety at that time when this technology becomes obsolete or this facility is no longer needed. Applicant shall notify the Current Planning Section within 30 days if it ceases to use the facility.

9. The applicant shall obtain a building permit and install the antennas and miscellaneous power/communication lines in accordance with the approved plans and conditions of approval. Any new cabling shall be installed underground.

10. During project construction, the applicant shall, pursuant to Section 5022 of the San Mateo County Ordinance Code, minimize the transport and discharge of stormwater runoff from the construction site into storm drain systems and water bodies by:

    a. Using filtration materials on storm drain covers to remove sediment from dewatering effluent.

    b. Stabilizing all denuded areas and maintaining erosion control measures continuously between October 15 and April 15.

    c. Removing spoils promptly, and avoiding stockpiling of fill materials, when rain is forecast. If rain threatens, stockpiled soils and other materials shall be covered with a tarp or other waterproof material.

    d. Storing, handling, and disposing of construction materials and wastes so as to avoid their entry to the storm drain system or water body.

    e. Avoiding cleaning, fueling, or maintaining vehicles on-site, except in an area designated to contain and treat runoff.

    f. Limiting and timing applications of pesticides and fertilizers to avoid polluting runoff.

11. Mitigation Measure 1: Prior to the issuance of a building permit, the applicant shall submit a landscape and irrigation plan to be reviewed by Current Planning staff. The goal of the plan should be to more completely screen both the equipment lease area and the monopole from I-280, and should feature native, drought tolerant plants. Landscaping and irrigation must be installed prior to a final inspection on the building permit. The applicant is responsible for replacing any plantings that do not survive promptly, as needed.

Woodside Fire Protection District

12. The applicant shall comply with all requirements of the Woodside Fire Protection District prior to issuance of a building permit.

Department of Public Works

13. No proposed construction work within the County right-of-way shall being until County requirements for the issuance of an encroachment permit, including review of the plans, have been mete and an encroachment permit issued.

14. The applicant shall obtain an encroachment permit with CalTrans prior to the issuance of a building permit.

County of San Mateo - Planning and Building Department

ATTACHMENT F

Radio Frequency Emissions Compliance Report For AT&T Mobility

Site Name:	**SHARON HEIGHTS**	**Site Structure Type:**	**Monopole**
Address:	**10 Lawler Ranch Road**	**Latitude:**	**37.4222333**
	Menlo Park, CA 94025	**Longitude:**	**-122.2269389**
Report Date:	**November 24, 2021**	**Project:**	**Modification**

Compliance Statement

Based on information provided by AT&T Mobility and predictive modeling, the SHARON HEIGHTS installation proposed by AT&T Mobility will be compliant with Radiofrequency Radiation Exposure Limits of 47 C.F.R. §§ 1.1307(b)(3) and 1.1310. RF alerting signage and restricting access to the Monopole to authorized climbers that have completed RF safety training is required for Occupational environment compliance. The proposed operation will not expose members of the General Public to hazardous levels of RF energy at ground level or in adjacent buildings.

Certification

I, David H. Kiser, am the reviewer and approver of this report and am fully aware of and familiar with the Rules and Regulations of both the Federal Communications Commissions (FCC) and the Occupational Safety and Health Administration (OSHA) with regard to Human Exposure to Radio Frequency Radiation, specifically in accordance with FCC's OET Bulletin 65. I have reviewed this Radio Frequency Exposure Assessment report and believe it to be both true and accurate to the best of my knowledge.

General Summary

The compliance framework is derived from the Federal Communications Commission (FCC) Rules and Regulations for preventing human exposure in excess of the applicable Maximum Permissible Exposure ("MPE") limits. At any location at this site, the power density resulting from each transmitter may be expressed as a percentage of the frequency-specific limits and added to determine if 100% of the exposure limit has been exceeded. The FCC Rules define two tiers of permissible exposure differentiated by the situation in which the exposure takes place and/or the status of the individuals who are subject to exposure. General Population / Uncontrolled exposure limits apply to those situations in which persons may not be aware of the presence of electromagnetic energy, where exposure is not employment-related, or where persons cannot exercise control over their exposure. Occupational / Controlled exposure limits apply to situations in which persons are exposed as a consequence of their employment, have been made fully aware of the potential for exposure, and can exercise control over their exposure. Based on the criteria for these classifications, the FCC General Population limit is considered to be a level that is safe for continuous exposure time. The FCC General Population limit is 5 times more restrictive than the Occupational limits.

In situations where the predicted MPE exceeds the General Population threshold in an accessible area as a result of emissions from multiple transmitters, FCC licensees that contribute greater than 5% of the aggregate MPE share responsibility for mitigation.

7430 New Technology Way, Suite 150 Frederick, Maryland 21703 (703) 596-1022 Phone www.waterfordconsultants.com

Table 1: FCC Limits

Frequency (MHz)	*Limits for General Population/ Uncontrolled Exposure*		*Limits for Occupational/ Controlled Exposure*	
	Power Density (mW/cm^2)	**Averaging Time (minutes)**	**Power Density (mW/cm^2)**	**Averaging Time (minutes)**
30-300	0.2	30	1	6
300-1500	f/1500	30	f/300	6
1500-100,000	1.0	30	5.0	6

f=Frequency (MHz)

Based on the computational guidelines set forth in FCC OET Bulletin 65, Waterford Consultants, LLC has developed software to predict the overall Maximum Permissible Exposure possible at any location given the spatial orientation and operating parameters of multiple RF sources. The power density in the Far Field of an RF source is specified by OET-65 Equation 5 as follows:

$$S = \frac{EIRP}{4 \cdot \pi \cdot R^2} \ (\mathrm{mW/cm^2})$$

where EIRP is the Effective Radiated Power relative to an isotropic antenna and R is the distance between the antenna and point of study. Additionally, consideration is given to the manufacturers' horizontal and vertical antenna patterns as well as radiation reflection. At any location, the predicted power density in the Far Field is the spatial average of points within a 0 to 6-foot vertical profile that a person would occupy. Near field power density is based on OET-65 Equation 20 stated as

$$S = \left(\frac{180}{\theta_{BW}}\right) \cdot \frac{100 \cdot P_{in}}{\pi \cdot R \cdot h} \ (\mathrm{mW/cm^2})$$

where P_{in} is the power input to the antenna, θ_{BW} is the horizontal pattern beamwidth and h is the aperture length.

Some antennas employ beamforming technology where RF energy allocated to each customer device is dynamically directed toward their location. This analysis includes a statistical factor reducing the actual power of the antenna system to 32% of maximum theoretical power to account for spatial distribution of users, network utilization, time division duplexing, and scheduling time. AT&T recommends the use of this factor based on a combination of guidance from its antenna system manufacturers, supporting international industry standards, industry publications, and its extensive experience.

7430 New Technology Way, Suite 150 Frederick, Maryland 21703 (703) 596-1022 Phone www.waterfordconsultants.com

Analysis

AT&T Mobility proposes the following installation at this location:

- REMOVE (9) EXISTING ANTENNAS, TYP. (3) PER SECTOR.
- INSTALL (9) NEW ANTENNAS, TYP. (3) PER SECTOR.
- REMOVE (3) EXISTING RRUS 11 B12 FROM EQUIPMENT AREA.
- INSTALL (3) RRUS 4449 B5/B12 AT ANTENNAS, TYP. (1) PER SECTOR.

The antennas will be mounted on a 22' Monopole with centerlines 20' above ground level. Proposed antenna operating parameters are listed in Appendix A. Other appurtenances such as GPS antennas, RRUs and hybrid cable below the antennas are not sources of RF emissions. Panel antennas have been installed at this site by other wireless operators. Operating parameters for these antennas considered in this analysis are also listed in Appendix A.

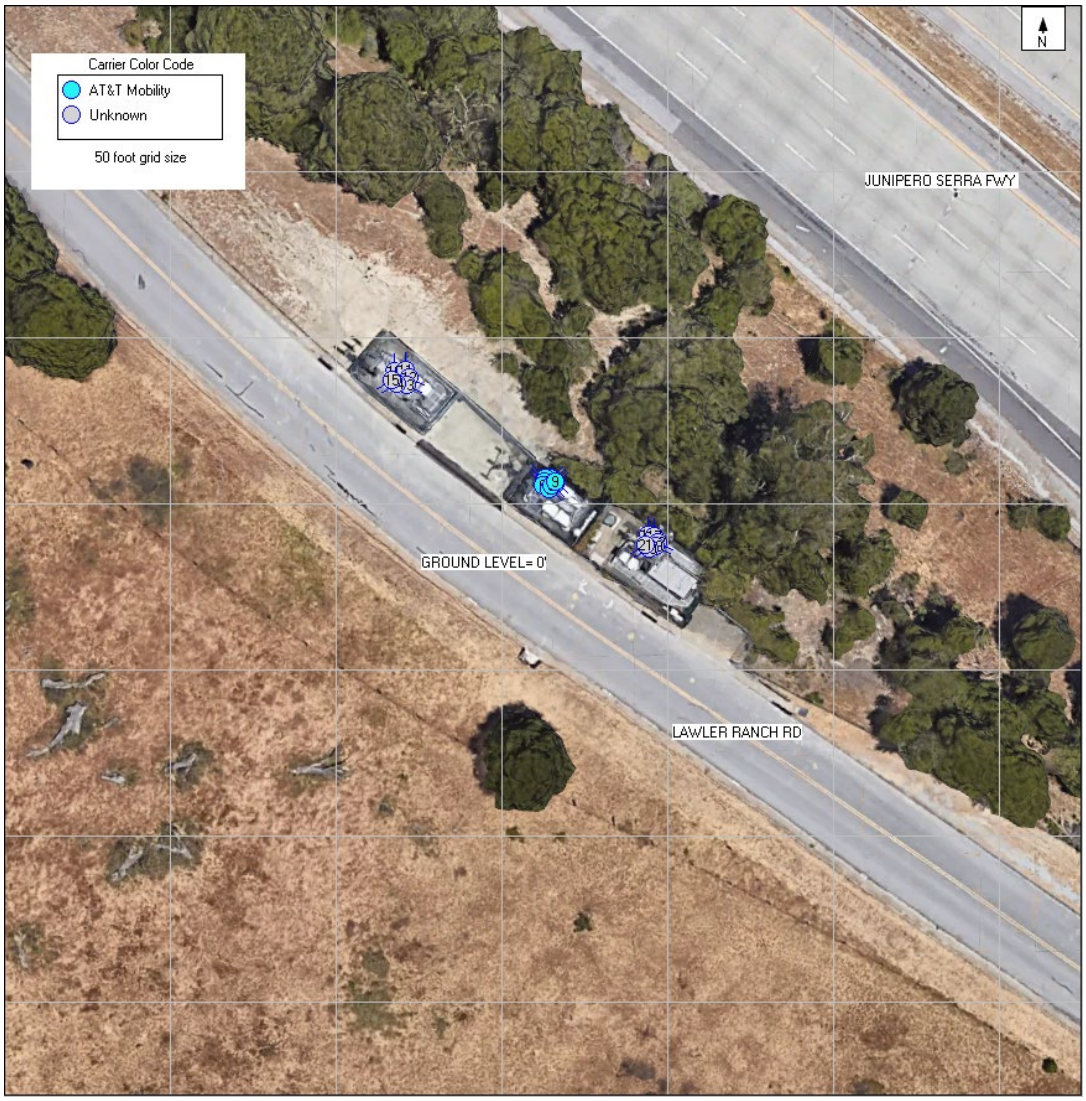

Power density decreases significantly with distance from any antenna. The panel-type antennas to be employed at this site are highly directional by design and the orientation in azimuth and mounting elevation, as documented, serves to reduce the potential to exceed MPE limits at any location other than directly in front of the antennas. For accessible areas at ground level, the maximum predicted power density level resulting from all AT&T Mobility operations is 54.0057% of the FCC General Population limits. Based on the operating parameters in Appendix A, the cumulative power density level at this location from all antennas is 57.2604% of the FCC General Population limits. There are no apparent inhabited buildings or structures in the immediate area as depicted in Figure 1. The proposed operation will not expose members of the General Public to hazardous levels of RF energy at ground level or in adjacent buildings.

Waterford Consultants, LLC recommends posting RF alerting signage with contact information (Caution 2B) near the antennas at the proposed Monopole to inform authorized climbers of potential conditions near the antennas. These recommendations are depicted in Figure 2.

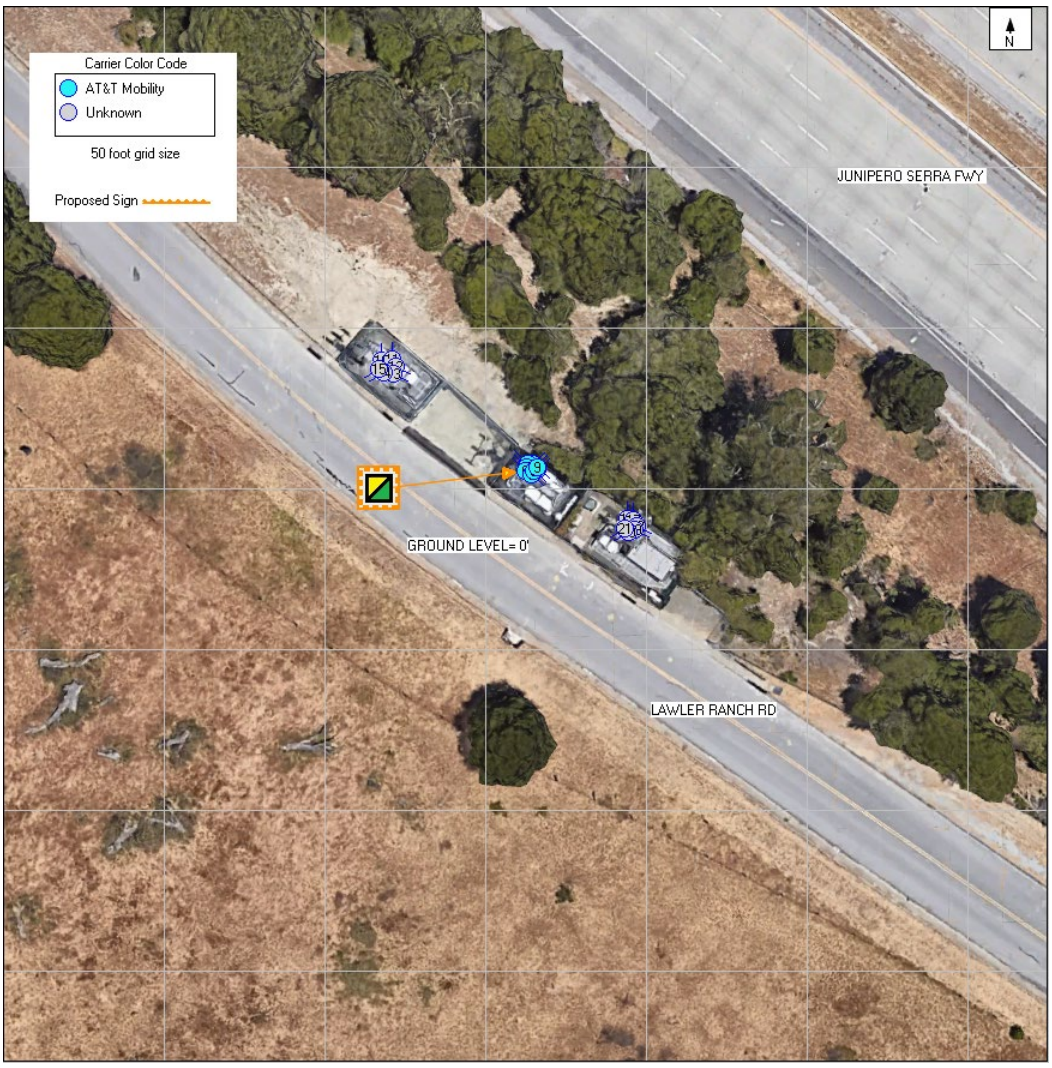

Caution 2B sign required on the base of the monopole at the access location

Appendix A: Operating Parameters Considered in this Analysis

Antenna #:	Carrier:	Manufacturer	Pattern:	Band (MHz):	Mech Az (deg):	Mech DT (deg):	H BW (deg):	Length (ft):	TPO (W):	Channels:	Loss (dB):	Gain (dBd):	ERP (W):	EIRP (W):	Rad Center (ft):
1	AT&T	QUINTEL	QS4658-7 02DT	700	50	0	69	4.3	40	4	0	9.95	1582	2595	20
1	AT&T	QUINTEL	QS4658-7 02DT	850	50	0	61	4.3	40	2	0	10.85	973	1596	20
1	AT&T	QUINTEL	QS4658-7 02DT	1900	50	0	74	4.3	40	4	0	13.25	3382	5548	20
2	AT&T	COMMSCOPE	NNH4-65A-R6H4 02DT	700	50	0	75	4.9	40	4	0	10.56	1820	2986	20
2	AT&T	COMMSCOPE	NNH4-65A-R6H4 02DT	2100	50	0	64	4.9	40	4	0	14.94	4990	8187	20
2	AT&T	COMMSCOPE	NNH4-65A-R6H4 02DT	2300	50	0	57	4.9	25	4	0	15.66	3681	6039	20
3	AT&T	ERICSSON	SON_AIR6449 NR TB 3700 AT&T	3700	50	0	11	2.8	108.4	1	6	23.55	6166	10116	20
4	AT&T	QUINTEL	QS4658-7 02DT	700	315	0	69	4.3	40	4	0	9.95	1582	2595	20
4	AT&T	QUINTEL	QS4658-7 02DT	850	315	0	61	4.3	40	2	0	10.85	973	1596	20
4	AT&T	QUINTEL	QS4658-7 02DT	1900	315	0	74	4.3	40	4	0	13.25	3382	5548	20
5	AT&T	COMMSCOPE	NNH4-65A-R6H4 02DT	700	315	0	75	4.9	40	4	0	10.56	1820	2986	20
5	AT&T	COMMSCOPE	NNH4-65A-R6H4 02DT	2100	315	0	64	4.9	40	4	0	14.94	4990	8187	20
5	AT&T	COMMSCOPE	NNH4-65A-R6H4 02DT	2300	315	0	57	4.9	25	4	0	15.66	3681	6039	20
6	AT&T	ERICSSON	SON_AIR6449 NR TB 3700 AT&T	3700	315	0	11	2.8	108.4	1	6	23.55	6166	10116	20
7	AT&T	QUINTEL	QS4658-7 02DT	700	130	0	69	4.3	40	4	0	9.95	1582	2595	20
7	AT&T	QUINTEL	QS4658-7 02DT	850	130	0	61	4.3	40	2	0	10.85	973	1596	20
7	AT&T	QUINTEL	QS4658-7 02DT	1900	130	0	74	4.3	40	4	0	13.25	3382	5548	20
8	AT&T	COMMSCOPE	NNH4-65A-R6H4 02DT	700	130	0	75	4.9	40	4	0	10.56	1820	2986	20
8	AT&T	COMMSCOPE	NNH4-65A-R6H4 02DT	2100	130	0	64	4.9	40	4	0	14.94	4990	8187	20
8	AT&T	COMMSCOPE	NNH4-65A-R6H4 02DT	2300	130	0	57	4.9	25	4	0	15.66	3681	6039	20
9	AT&T	ERICSSON	SON_AIR6449 NR TB 3700 AT&T	3700	130	0	11	2.8	108.4	1	6	23.55	6166	10116	20
10	Unknown	RFS	APXV9ERR18-C-02DT	850	0	0	80	6	25	4	0	11.9	1531	2512	20
10	Unknown	RFS	APXV9ERR18-C-00DT	1900	0	0	80	6	45	4	0	14.6	5132	8419	20
11	Unknown	RFS	APXVTM14 ALU-I20 00DT	2500	0	0	65	4.7	20	8	0	15.9	6153	10095	20
12	Unknown	RFS	APXV9ERR18-C-02DT	850	120	0	80	6	25	4	0	11.9	1531	2512	20
12	Unknown	RFS	APXV9ERR18-C-00DT	1900	120	0	80	6	45	4	0	14.6	5132	8419	20

Antenna #:	Carrier:	Manufacturer	Pattern:	Band (MHz):	Mech Az (deg):	Mech DT (deg):	H BW (deg):	Length (ft):	TPO (W):	Channels:	Loss (dB):	Gain (dBd):	ERP (W):	EIRP (W):	Rad Center (ft):
13	Unknown	RFS	APXVTM14 ALU-I20 00DT	2500	120	0	65	4.7	20	8	0	15.9	6153	10095	20
14	Unknown	RFS	APXV9ERR18-C-02DT	850	240	0	80	6	25	4	0	11.9	1531	2512	20
14	Unknown	RFS	APXV9ERR18-C-00DT	1900	240	0	80	6	45	4	0	14.6	5132	8419	20
15	Unknown	RFS	APXVTM14 ALU-I20 00DT	2500	240	0	65	4.7	20	8	0	15.9	6153	10095	20
16	Unknown	RFS	APXV9ERR18-C-02DT	850	0	0	80	6	25	4	0	11.9	1531	2512	20
16	Unknown	RFS	APXV9ERR18-C-00DT	1900	0	0	80	6	45	4	0	14.6	5132	8419	20
17	Unknown	RFS	APXVTM14 ALU-I20 00DT	2500	0	0	65	4.7	20	8	0	15.9	6153	10095	20
18	Unknown	RFS	APXV9ERR18-C-02DT	850	120	0	80	6	25	4	0	11.9	1531	2512	20
18	Unknown	RFS	APXV9ERR18-C-00DT	1900	120	0	80	6	45	4	0	14.6	5132	8419	20
19	Unknown	RFS	APXVTM14 ALU-I20 00DT	2500	120	0	65	4.7	20	8	0	15.9	6153	10095	20
20	Unknown	RFS	APXV9ERR18-C-02DT	850	240	0	80	6	25	4	0	11.9	1531	2512	20
20	Unknown	RFS	APXV9ERR18-C-00DT	1900	240	0	80	6	45	4	0	14.6	5132	8419	20
21	Unknown	RFS	APXVTM14 ALU-I20 00DT	2500	240	0	65	4.7	20	8	0	15.9	6153	10095	20

Notes: Table depicts recommended operating parameters for AT&T Mobility proposed operations. Colocated antenna parameters based on industry standards.

7430 New Technology Way, Suite 150 Frederick, Maryland 21703 (703) 596-1022 Phone www.waterfordconsultants.com